User Manual

Home Energy Storage
High Voltage Hybrid Inverter

Applicable Models:
S6-EH1P3.8K-H-US
S6-EH1P5K-H-US
S6-EH1P7.6K-H-US
S6-EH1P9.9K-H-US
S6-EH1P10K-H-US
S6-EH1P11.4K-H-US

Version 5.6 Release Date: 06/2025

Important Notes

- Product specifications are subject to change without notice. Every attempt has been made to make this document complete, accurate and up-to-date. Individuals reviewing this document and installers or service personnel are cautioned, however, that Solis reserves the right to make changes without notice and shall not be responsible for any damages, including indirect, incidental or consequential damages caused by reliance on the material presented including, but not limited to, omissions, typographical errors, arithmetical errors or listing errors in the material provided in this document.

- Solis accepts no liability for customers' failure to comply with the instructions for correct installation and will not be held responsible for upstream or downstream systems Solis equipment has supplied.

- The customer is fully liable for any modifications made to the system; therefore, any hardware or software modification, manipulation, or alteration not expressly approved by the manufacturer shall result in the immediate cancellation of the warranty.

- Given the countless possible system configurations and installation environments, it is essential to verify adherence to the following:
  - There is sufficient space suitable for housing the equipment.
  - Airborne noise produced depending on the environment.
  - Potential flammability hazards.

- Solis will not be held liable for defects or malfunctions arising from:
  - Improper use of the equipment.
  - Deterioration resulting from transportation or particular environmental conditions.
  - Performing maintenance incorrectly or not at all.
  - Tampering or unsafe repairs.
  - Use or installation by unqualified persons.

- This product contains lethal voltages and should be installed by qualified electrical or service personnel having experience with lethal voltages.

Table of Contents

1 Introduction

2 Safety

3 Overview

4 Operating Modes

5 Installation

6 Commissioning

7 Troubleshooting

8 Specifications

9 Appendix

Table of Contents

1. Introduction.....06
1.1 Inverter Description.....06
1.2 Included Components.....09
1.3 Tools Required for Installation.....09
1.4 Inverter Storage.....10
2. Safety & Warning.....11
2.1 Safety.....11
2.2 General Safety Instructions.....11
2.3 Notice for Use.....13
2.4 Notice for Disposal.....13
2.5 Protection Circuitry and Controls.....13
3. Overview.....14
3.1 LED Indicator Lights.....14
3.2 Inverter Wire Box and Connection Points.....15
4. Operating Modes.....16
4.1 PV-Only.....16
4.2 Energy Storage.....17
4.3 DC Coupling vs AC Coupling.....20
4.4 Partial-Home vs Whole-Home Backup.....22
4.5 Backup Power Inverter Paralleling.....24
4.6 Generator Operation.....28
4.7 Wiring Diagrams.....29
5. Installation.....32
5.1 Selecting a Location to Install the Inverter.....32
5.2 Product Handling.....33
5.3 Inverter Dimensions.....35
5.4 Mounting the Inverter.....37
5.5 Inverter Wiring Overview.....39
5.6 Equipment Grounding.....41
5.7 PV Installation.....42
5.8 Rapid Shutdown.....43
5.9 Battery Installation.....48
5.10 AC Wiring.....49
5.11 Inverter Communication.....52
6. Commissioning.....61
6.1 Pre-Commissioning Steps.....61
6.2 Commissioning Procedure.....61

Table of Contents

7. Troubleshooting.....71
7.1 Inverter Shutdown Procedure.....71
7.2 Inverter Maintenance.....71
7.3 Inverter Alarm Codes.....72
7.4 Inverter Firmware.....75
8. Specifications.....76
9. Appendix.....88
9.1 Temperature Derating Curve.....88
9.2 Inverter Internal Toplogy.....88
9.3 UL 1741 Certification.....89
9.4 UL 1741 Power Control Systems (PCS) CRD.....91
9.5 Default Settings for IEEE1547-2018 (UL-240V-18 Standard).....93
9.6 Default Settings for California Rule 21 (R21P3-24A Standard).....95
9.7 FCC Instructions.....97

1. Introduction

1.1 Inverter Description

The Solis S6 Hybrid series is designed for residential applications. The inverter pairs up with high-voltage lithium ion batteries to maximize self-consumption and provide backup power when the grid fails. This inverter can operate in both on-grid and off-grid applications. The inverter can provide backup power without a battery if there is enough PV power to cover the load demand. It can also operate in tandem with a generator. The S6 hybrid series consists of the following inverter models: 3.8kW, 5kW, 7.6kW, 9.9kW, 10kW, and 11.4kW. The inverter comes with an integrated rapid shutdown transmitter that must be specified when placing an order for the inverter. The data logger is included.

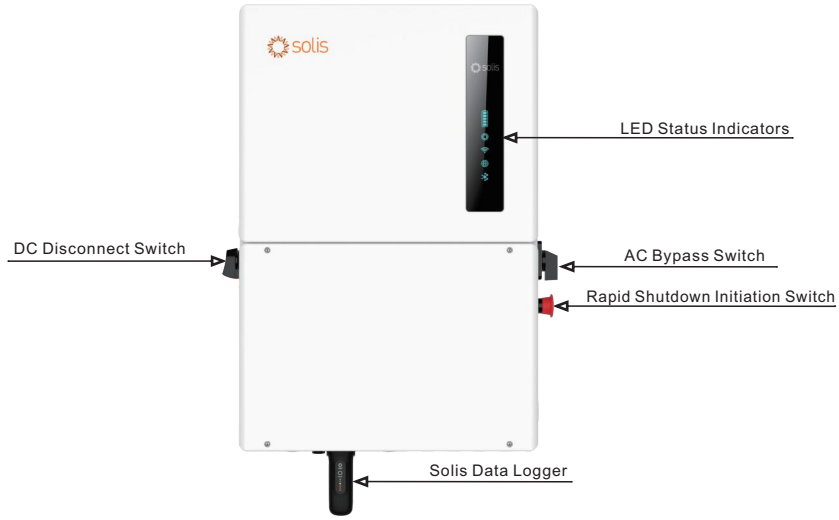

Figure 1.1 Frontal View

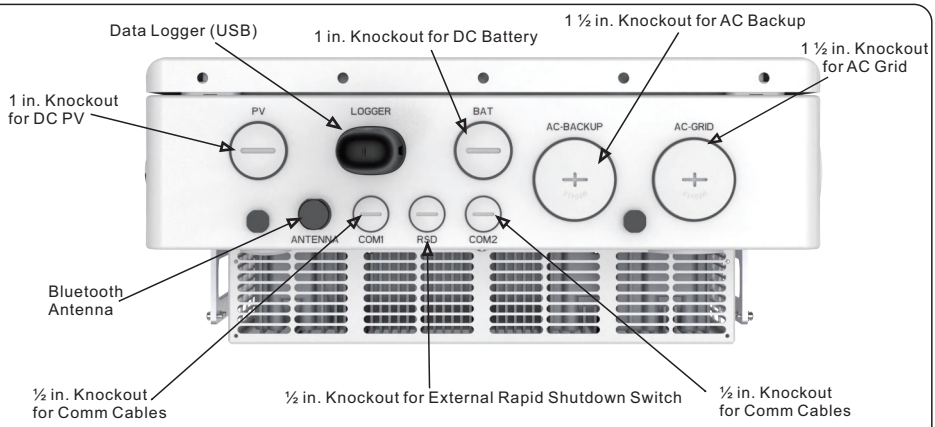

Figure 1.2 Bottom View (Wire Box)

1. Introduction

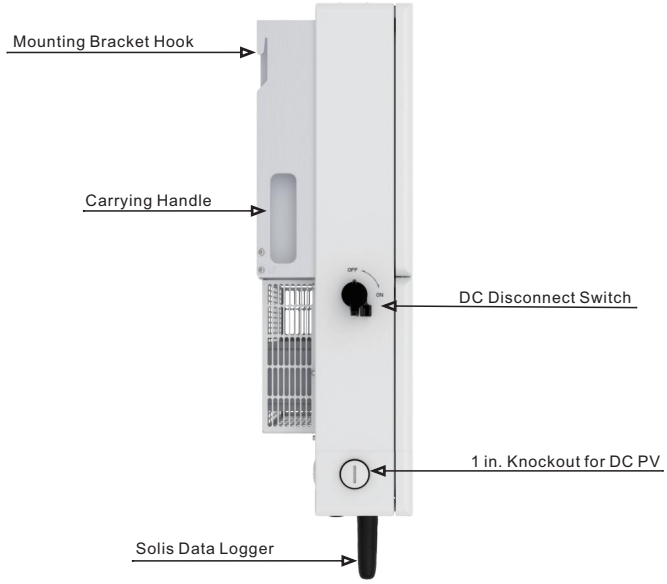

Figure 1.3 Right Side View

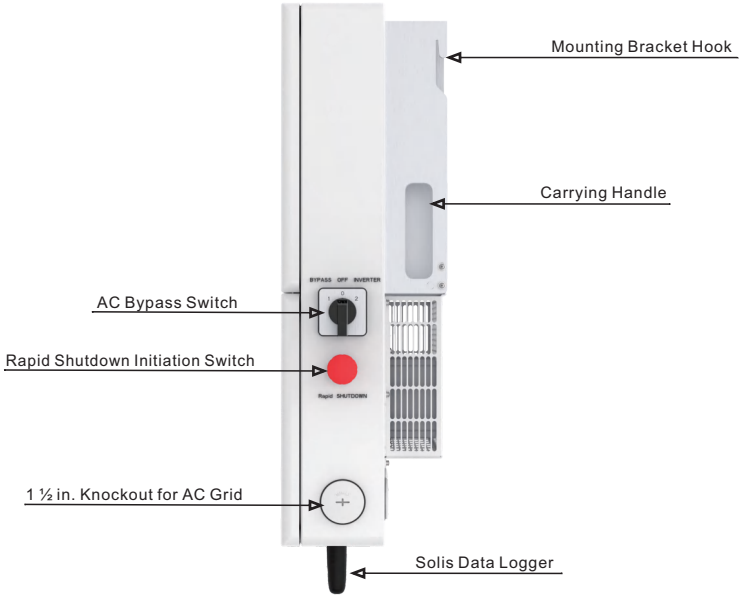

Figure 1.4 Left Side View

1. Introduction

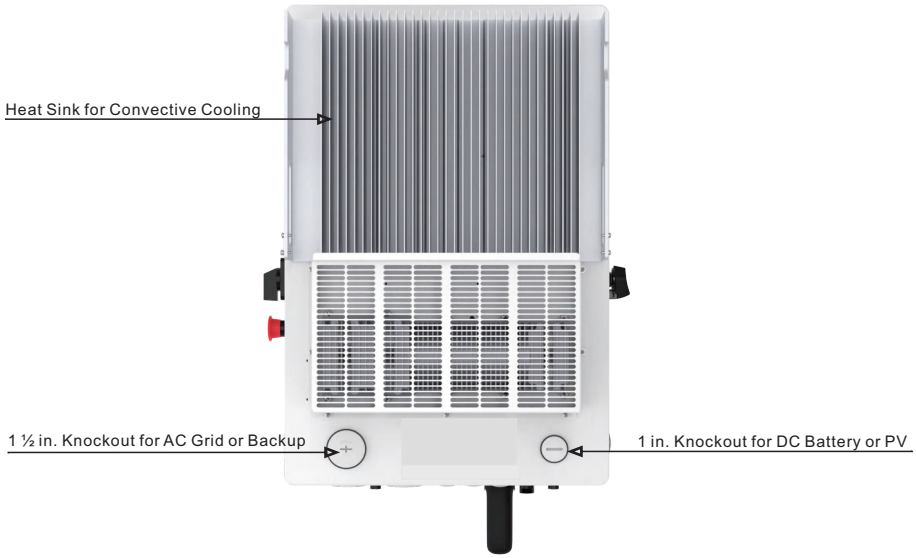

Figure 1.5 Back View

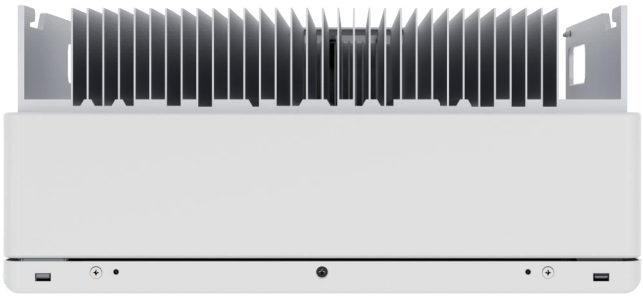

Figure 1.6 Top View

1. Introduction

1.2 Components Included with the Inverter

If any of these items are missing, please contact your local Solis distributor or the Solis service team.

Inverter x1

Inverter Mounting Bracket x1

Stabilizing Set Screws x4

Spare Wire Box Cover Screws x4

Mounting Bracket Lag Bolts x4

1/2 inch Cable Glands x3

External Energy Meter x1

Current Transformers x2

Terminal Pins x10

Terminal Pins x4

Torqx T20 Tool x1

RJ45 Connector x3

Parallel Communication Cable (6.5 ft) x1

Data Logger

1.3 Tools Required for Inverter Installation

Technician Screwdriver

Torqx T20 Screwdriver

Wire Strippers 12AWG to 6AWG

Wire Strippers 20AWG to 10AWG

Smartphone (for commissioning)

Channel Locks

Multimeter (AC/DC amps)

Drill and Impact Driver

Ratcheting Crimper

Bubble Level

1. Introduction

1.4 Inverter Storage

- If the inverter is not installed immediately, please abide by the storage instructions and environmental conditions listed below.
- Use the original box to repackage the inverter, seal with adhesive tape with the desiccant inside the box.
- Store the inverter in a clean and dry place, free of dust and dirt. The storage temperature must be between -40~158°F and humidity should be between 0 to 100%, non-condensing.
- Do not stack more than two (2) inverters high on a single pallet. Do not stack more than 2 pallets high.
- Keep the box(es) away from corrosive materials to avoid damage to the inverter enclosure.
- Inspect the packaging regularly. If packaging is damaged (wet, pest damages, etc.), repackage the inverter immediately.
- Store inverters on a flat, hard surface -- not inclined or upside down.
- Do not remove the desiccant packet that is included with the inverter. It is included to ensure that any residual moisture is absorbed quickly.
- Restarting after a long period of non-use requires the equipment be inspected and, in some cases, the removal of oxidation and dust that has settled inside the equipment will be required.
- Perform an annual visual inspection of the inverter box for signs of damage
- If the inverter has been removed from the box and then replaced, put desiccant packets in the inverter wire box to ensure the internal components stay dry
- Do not store the inverter outside or in a place that does not have environmental controls.

DO NOT STACK
MORE THAN 2 HIGH

2. Safety & Warning

2.1 Safety

The following types of safety instructions and general information appear in this document as described below:

DANGER
"Danger" indicates a hazardous situation which if not avoided, will result in death or serious injury.

WARNING
"Warning" indicates a hazardous situation which if not avoided, could result in death or serious injury.

CAUTION
"Caution" indicates a hazardous situation which if not avoided, could result in minor or moderate injury.

NOTE
"Note" provides tips that are valuable for the optimal operation of your product.

WARNING: Risk of fire
Despite careful construction, electrical devices can cause fires.

- Do not install the inverter in an area containing flammable materials or gases.
- Do not install the inverter in a potentially explosive atmosphere.

2.2 General Safety Instructions

WARNING
Only devices in compliance with SELV (EN 69050) may be connected to the RS485 and USB interfaces.

WARNING
Do not connect PV array positive (+) or negative (-) to ground, doing so could cause serious damage to the inverter.

WARNING
Electrical installations must be done in accordance with local and national electrical safety standards.

5min

WARNING
Do not touch any internal parts until 5 minutes after disconnection from the utility grid, PV array, and battery.

2. Safety & Warning

WARNING
To reduce the risk of fire, over-current protective devices (OCPD) are required for all circuits connected to the inverter.
The DC OCPD shall be installed per local requirements. All photovoltaic source and output circuit conductors shall have isolators that comply with the NEC Article 690, Part II.
All Solis single phase inverters feature an integrated DC disconnect switch.

CAUTION
Risk of electric shock, do not remove the cover. There are no serviceable parts inside, refer servicing to qualified and accredited service technicians.

CAUTION
The PV conductors are energized with high voltage DC when the PV modules are exposed to sunlight.

CAUTION
The surface temperature of the inverter can reach up to 75 (167°F).
To avoid risk of burns, do not touch the surface of the inverter while it is operating. The inverter must be installed out of direct sunlight exposure.

NOTE
PV modules used with inverter must have an IEC 61730 Class A rating.

WARNING
Operations must be accomplished by a licensed electrician or a person authorized by Solis.

WARNING
Installer must wear personal protective equipment during the entire installation process in case of electrical hazards.

WARNING
The AC Backup Port of the inverter cannot be connected to the grid.

WARNING
Please refer to the product manual of the battery before installation and configuration to the inverter.

Systems using this product shall be designed and built in accordance with the NEC & local electrical codes & standards.

2. Safety & Warning

2.3 Notice for Use

The inverter has been constructed according to the applicable safety and technical guidelines. Use the inverter in installations that meet the following specifications only:

1. Permanent installation is required.

2. The electrical installation must be compliant with all local and national regulations & standards.

3. The inverter must be installed according to the instructions stated in this manual.

4. The inverter must be installed according to the inverter technical specifications.

2.4 Notice for Disposal

This product shall not be disposed of with household waste. It must be segregated and brought to an appropriate disposal facility to ensure proper recycling.

This it to be done in order to avoid negative impacts on the environment and human health. The inverter contains materials that should not end up in a landfill.

Local waste management rules shall be observed and respected.

2.5 Protection Circuitry and Controls

To meet relevant codes and standards, the Solis U.S. single phase inverter line is equipped with protective circuitry and controls. These include Arc Fault Circuit Interrupter (AFCI) & Anti-Islanding Protection.

Arc Fault Circuit Interrupter AFCI:

Edition 2011 of the National Electrical Code®, Section 690.11, requires that all PV plants attached to a building are fitted with a means of detecting and interrupting serial electric arcs in the PV wiring and array. An electric arc with a power of 300W or greater must be interrupted by the AFCI in the time specified by UL 1699B. After five arc fault detections in 24 hours, an AFCI-induced shutdown will be triggered. If this event occurs, the inverter must be manually reset. After clearing the source of the fault, the inverter can be powered back on and allowed to resume normal operation.

Anti-Islanding Protection:

Anti-Islanding is a condition where the inverter cease to produce power when the grid is not present. Circuitry, along with firmware, has been designed to determine if the grid is present by adjusting the output frequency of the inverter. In the case of a 60Hz resonant system where the inverter is partially isolated from the grid, the inverter programming can detect if there is a resonant condition or if the grid is actually present. It can also differentiate between inverters operating in parallel and the grid.

NOTE:
All Solis inverters come with AFCI and Anti-Islanding protections integrated and enabled by default. The settings cannot be disabled or modified.

3. Overview

3.1 LED Indicator Lights

There are five indicator lights on the the Solis S6-EH1P(3.8-11.4)K-H-US Series Inverter: Battery, Operation, Logger, RS485 and Bluetooth. These lights indicate the operating status of the inverter. The inverter generates a Bluetooth signal. To access the inverter interface, a smart phone must connect through the SolisCloud app. This is how commissioning and settings changes are performed.

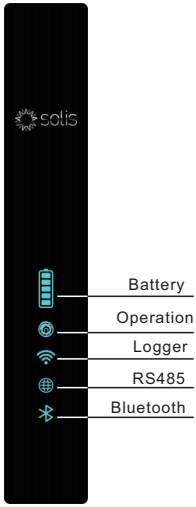

Light	Status	Description
Battery	Blue Flashing every 3s	Battery is discharging
	Blue Flashing every 1.5s	Battery is charging
	Blue Solid ON	Battery is idling
	OFF	No battery
Operation	Blue Solid ON	System is operating normally
	Orange Solid ON	Warning alarm
	Red Solid ON or flashing	Critical alarm
	OFF	Inverter is off
Logger	Blue Solid ON	Data logger is connected
	OFF	Data logger is not connected
RS485	Blue Solid ON	Not relevant for US version
	OFF	Not relevant for US version
Bluetooth	Blue Solid ON	Bluetooth connection established
	OFF	No Bluetooth connection established

Alarm State

When the inverter has an alarm, the Inverter LED light turns red or orange. It is recommended to connect a phone to the inverter Bluetooth through the SolisCloud app to determine what the alarm is.

How to Operate the Indicators

The Battery, Logger, Ethernet, and Bluetooth indicators will automatically turn off after one minute. The Operation indicator will remain on with lower brightness. Short press the Operation indicator to light up the other indicators.

Inverter Bluetooth Password

The inverter interface is accessed through the SolisCloud application. After first connecting to the inverter through Bluetooth, a password must be created. The password is required to connect to the inverter. It is highly recommended to write down the password on the inside of the inverter wire box cover with a permanent marker. If the password ever needs to be reset, it can be done by following this process:

1. Long press the Operation indicator for 5 seconds
2. If the reset is successful, the operation light will flash blue in 1/2-second intervals for three seconds.
3. If the reset fails, the operation light will flash yellow instead of blue.
4. Contact Solis Support for assistance with resetting the password.

3. Overview

3.2 Inverter Wire Box and Connection Points

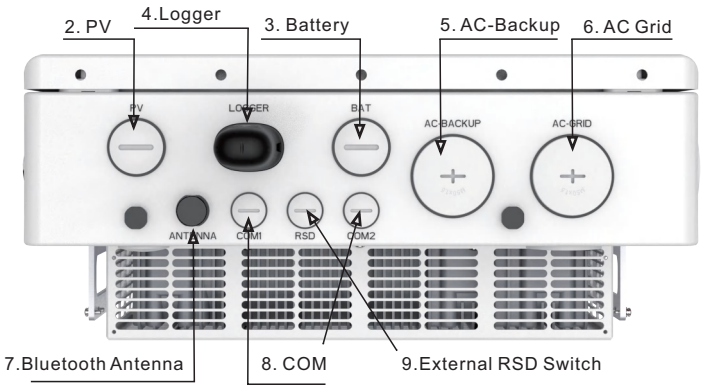

Name	Description
1. DC Switch	This is the DC disconnect switch for the inverter
2. PV	Conduit and PV conductors should be connected here
3. Battery	Conduit for battery conductors should be connected here
4. Solis Logger Port	Port (USB) for connecting Solis data loggers only
5. AC-Backup	Conduit for AC conductors to backup loads panel should be connected here
6. AC-Grid	Conduit for AC conductors to the main service panel should be connected here
7. Bluetooth Antenna	Extends the range of the inverter Bluetooth signal (for system commissioning)
8. COM1/COM2	RS 485 and CAN communication cables should use these knockouts and terminals
9. External RSD port	An external RSD switch can be added and connected to the inverter here
10. Rapid Shutdown Switch	Disables the internal transmitter, which initiates module level rapid shutdown
11. AC Bypass Switch	Allows the inverter to pass power through from the grid (main service panel) to the backup loads directly in the event of an inverter failure.
12. RSD Transmitter	Sends a PLC signal through the PV strings to the Rapid Shutdown (RSD) receivers located in the PV array. The brand of the transmitter will vary.

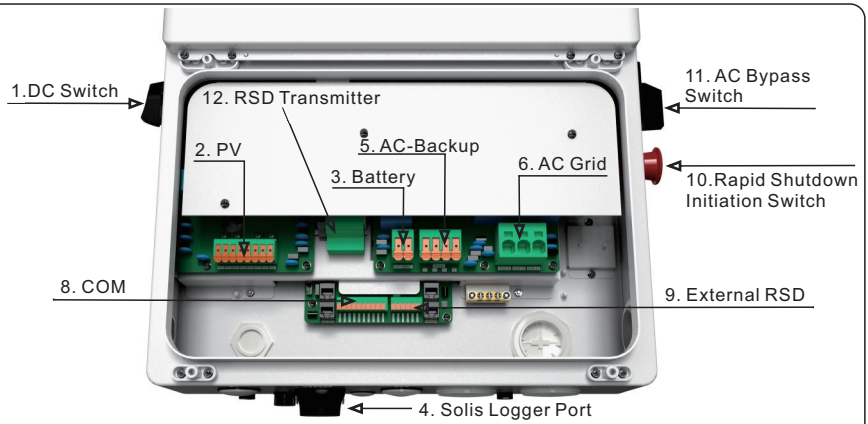

4. Operating Modes

4.1 PV-Only

4.1.1 Grid-Tie PV String Inverter

The S6 hybrid can function as a grid-tie PV string inverter with no battery. It will use PV power to supply the home loads while the grid is active. The inverter does have export power control so it can be programmed to sell the excess power back to the grid. Whenever there is not enough PV power to cover the load demand, power will be imported from the utility to cover the deficit. If the grid fails, the inverter is able to provide backup power to the loads but only as much as PV can cover.

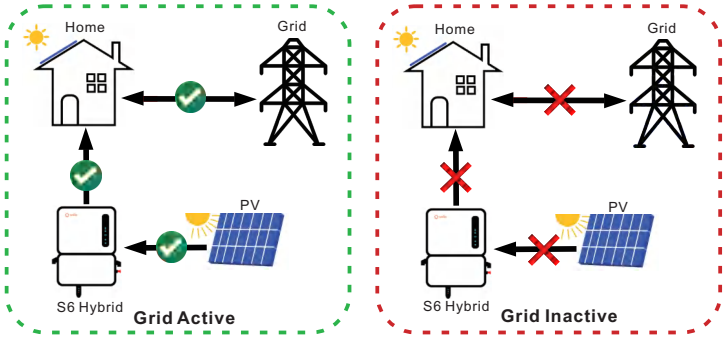

Figure 4.1 Solis S6 hybrid as a grid-tie PV string inverter

4.1.2 Export Power Control

The inverter offers the ability to manage export power. During the system commissioning process, export power control can be enabled. An export power limitation can then be set to the desired kW value. The inverter will then regulate how much power gets sold back to the utility company.

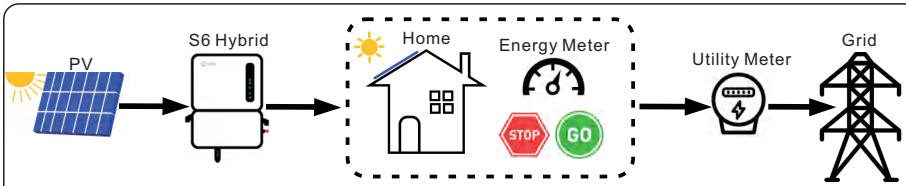

Figure 4.2 Solis S6 hybrid with export power control enabled

Each Solis hybrid comes with an energy meter, which gets installed externally to the inverter. The energy meter uses two CTs, which measure the power being consumed and imported by the home. The hybrid uses the data from this meter to determine whether or not it needs to curtail the PV power to meet the export power limitation. Export power control can be enabled with or without a battery being installed and paired with the inverter.

Zero-Net Export

The inverter can be set to not export any power to the utility. This does not end up being zero export as there is some power that leaks back to the utility each time there is a change in load consumption However, the *net import/export* will be near zero kWh each day when configured for zero export.

NOTE:

The energy meter must be installed to have visibility into export/import and power consumption. Without the meter, the inverter will still function but with limited capabilities. **Export power control is not possible without the energy meter being installed.**

4. Operating Modes

4.2 Energy Storage

4.2.1 Overview of Energy Storage Modes

The S6 hybrid is capable of providing AC power to home loads using PV and battery power in the event of a grid failure. This is known as ***backup power***. The amount of backup power that each S6 hybrid model can provide is equal to the amount of on-grid power that it can provide. For example, an 11.4K model can provide up to 11.4K of continuous backup power.

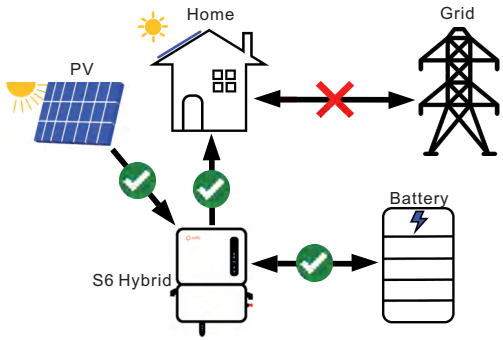

Figure 4.3 Backup power with Solis S6 hybrid

If the primary purpose of the energy storage system is to store as much of the PV power as possible so that it can be used later to offset the consumption of grid power, this is known as energy arbitrage. *Time-of-use*, *self-consumption*, and *peak-shaving* are all examples of ***energy arbitrage***. Typically, the battery will cycle daily as it charges with PV during the day and then discharges in the evening to cover home load demand.

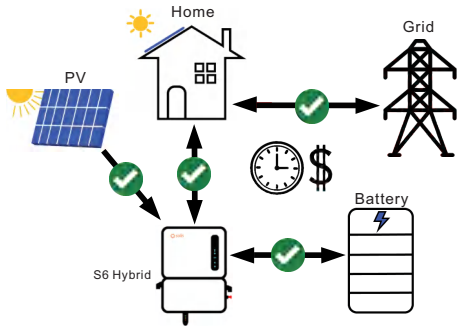

Figure 4.4 Energy arbitrage with Solis S6 hybrid

The S6 hybrid can also operate in an entirely remote system where there is no grid present at all. This is called ***off-grid*** mode. It is very similar to backup in that the inverter will supply AC power to loads with PV and battery power only. However, backup mode is only for grid-connected systems.

NOTE:
The inverter has two separate AC outputs: (1) to grid (2) to backup. For home loads to have backup power, a dedicated and isolated subpanel must be installed and connected to the backup port of the inverter.

4.2.2 Energy Arbitrage

The S6 hybrid inverter has multiple operating modes which can be programmed so that the performance of the system is tailored to the specific needs of each individual system owner. The backup power function of the inverter can be enabled or disabled independently of the energy arbitrage modes:(1) Self-Use (2) Peak-Shaving (3) Feed-in-Priority (export priority).

Self-Use Mode

Self-Use is the default energy storage mode. PV power will always supply the home loads first. Any excess PV power gets stored in the battery. If the battery is fully charged, the remaining power can be exported if the system is configured to allow it. If not, the PV power will be curtailed.

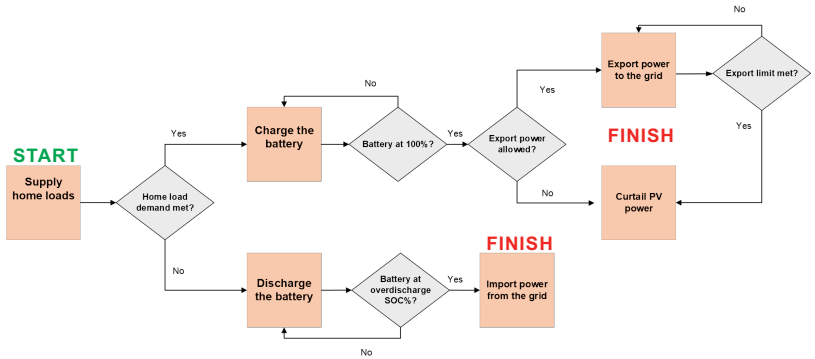

Figure 4.5 Self-Use Mode logic diagram

Peak-Shaving Mode

Peak-shaving mode is ideal for those who pay a variable rate for energy based on the amount of consumed power (kw). This mode limits the power imported from the grid. The inverter will only discharge the battery when the power imported from the grid exceeds a specified amount (kW).

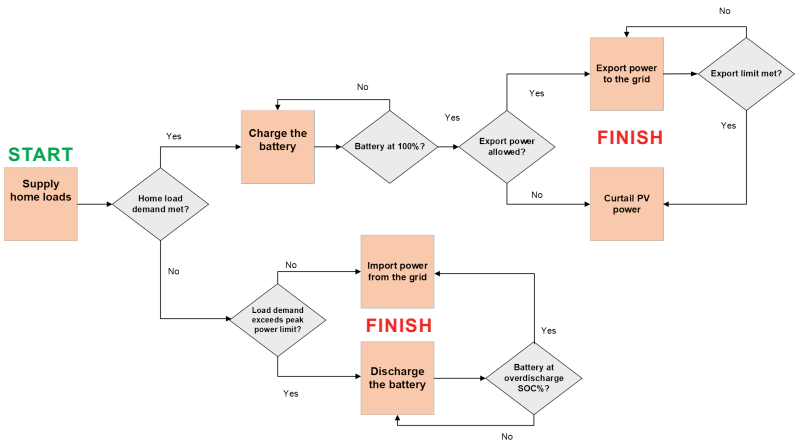

Figure 4.6 Peak-Shaving Mode logic diagram

4. Operating Modes

Feed-In-Priority Mode

This mode can be thought of as export priority mode. The system will first supply the home loads with PV power and then it will export the excess PV power, up to the specified limit. Once that limit is reached, the remaining power will be stored into the battery. If the battery is fully charged, the PV will at that point be curtailed. This mode is for those who plan to only use their battery for backup or those who receive a 1:1 rebate for power exported compared with power imported.

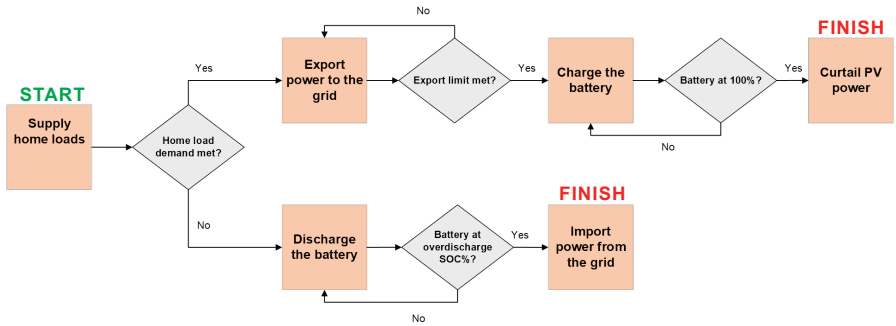

Figure 4.7 Feed-in-Priority Mode logic diagram

Off-Grid Mode

There is a dedicated mode specifically for off-grid remote systems which are not electrically connected to the grid at all, such as a cabin in the woods. This mode is not to be confused with backup, which occurs only for grid-tied systems. The logic for Off-Grid mode is the same as Self-Use mode. However, there is no export power control and a generator is often used in place of the grid to supplement the PV & batteries. When the generator is turned on by the inverter the PV production is temporarily suspended as to not backfeed the generator. The inverter will use generator power to supply the loads and recharge the battery. The inverter must have a battery connected in order to provide power in an off-grid system. The inverter cannot operate in an off-grid system with PV only.

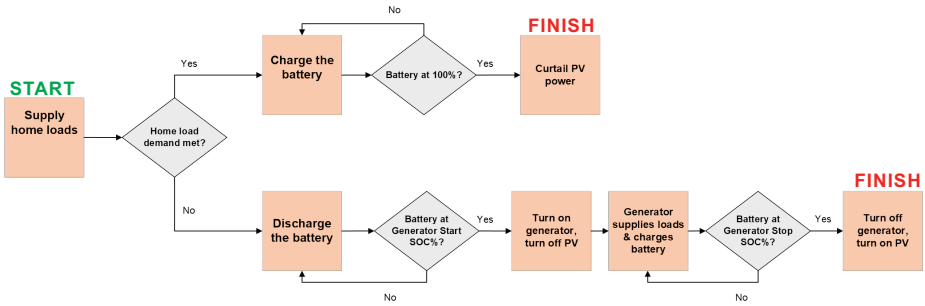

Figure 4.8 Off-Grid Mode logic diagram

NOTE:
If off-grid mode is selected, there must not be any conductors connected to the grid port of the inverter. Doing this will void the inverter warranty.

4. Operating Modes

4.3 DC Coupling vs AC Coupling

4.3.1 DC-Coupling

DC-coupling is the recommended configuration for this inverter. This is because DC-coupling allows the full potential of this inverter to be utilized, maximizing the efficiency of the PV-to-battery charging.

In a DC-coupled system, the PV also gets connected to the inverter in addition to the battery. The inverter will charge the battery directly with DC power from the PV. Typically, DC-coupling is done when additional PV is being added or when the system is new and being installed with energy storage.

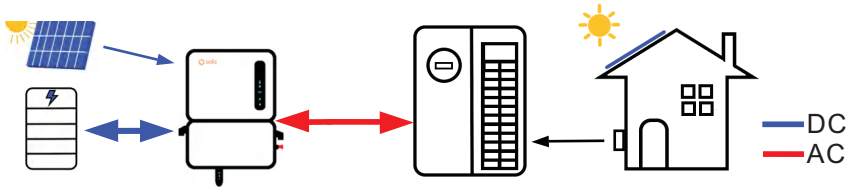

Figure 4.9 DC-coupled Solis S6 hybrid system

The next section explains how the S6 hybrid can be AC-coupled. The next several sections proceeding it will all focus solely on DC-coupling methods..

4.3.2 AC-Coupling

The Solis S6 hybrid can be DC-coupled or AC-coupled to a home to add energy storage. In an AC-coupled the energy storage is connected to the AC-side of the system. Typically, the battery and Solis hybrid pairing get connected in parallel with an existing PV system. The battery will charge with PV power from the existing PV system. When AC-coupling with the S6 hybrid, new PV can either be added or not be added to the S6 hybrid, it is up to the system designer. The hybrid would just need to be installed with a compatible high-voltage battery and then be connected to the home load center in parallel with the existing PV system.

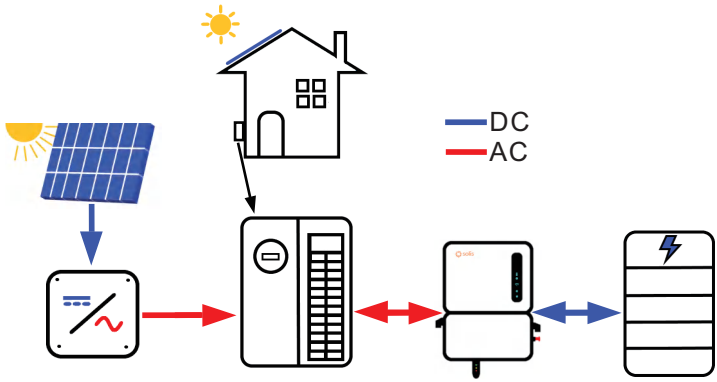

Figure 4.10 AC-coupled Solis S6 hybrid system

The ability to be AC-coupled makes the Solis S6 hybrid ideal for system retrofits. The hybrid can be installed in place of the old PV inverter and have energy storage added to it.

4.3.3 AC-Coupled PV with Backup

An existing PV system can be AC-coupled to the backup side so that it can be supported when the grid is down. The acronym “ACPV” will be used to generically describe any existing PV system that will be AC-coupled with the energy storage and backup. This is to distinguish it from “PV”, which is connected on the DC-side of the S6 energy storage system alternatively. The breaker for the ACPV system will need to be relocated into the backup load center so that it can remain energized during a grid outage. If ACPV is to be connected on the backup side, it is recommended to be mindful of grid-side consumption when the system is connected to the grid, not in backup. If the load consumption on the grid-side is higher than the inverter nameplate power rating while the grid is present, an overload alarm could occur. This is when the total PV power going to the loads from both the Solis and the ACPV system exceeds the Solis nameplate power rating.

The ACPV system connected to the backup-side of the system must be smaller than or the same size as the Solis hybrid inverter. Export power must be set so that the maximum export power is equal to the Solis inverter nameplate power rating.

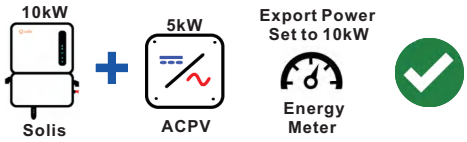

Do not connect an ACPV system to the backup-side of the system that is larger than the nameplate power rating of the Solis inverters. If there are multiple Solis inverters, then the combined total power.

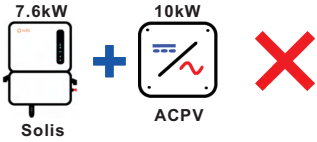

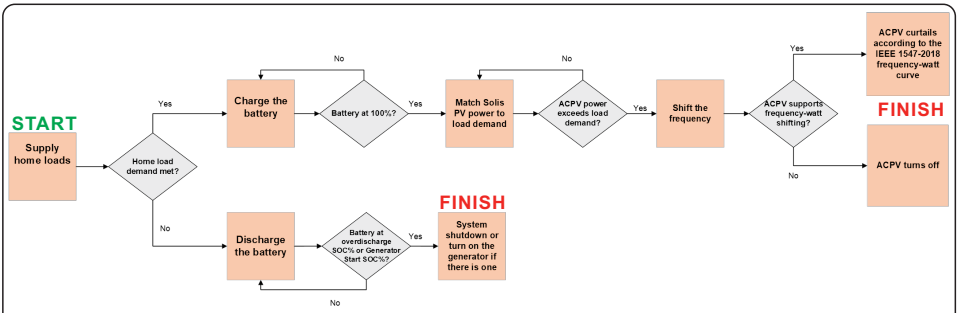

Figure 4.11 AC-Coupling (ACPV) with Backup Operating Logic

Frequency Shifting

There is no direct communication between the Solis S6 hybrid and the AC-coupled PV system. The inverter uses frequency-shifting to modulate the output of the ACPV system. The inverter uses the frequency-watt curve outlined in the IEEE 1547-2018 standard. When in backup mode, the S6 hybrid will begin to shift the AC frequency when it detects that the power supplied by all of the PV, including the ACPV, is greater than the power demanded (consumed). This change in frequency will be detected by the ACPV system. If the ACPV system also supports the IEEE 1547-2018 frequency-watt curve, then its output power will reduce according to that curve. If the ACPV system does not support frequency-watt, then it will shut off as the frequency shifts and then turn back on once the S6 hybrid corrects the frequency.

The maximum output power of the existing PV inverter must be less than the maximum output power of the Solis hybrid inverter. AC coupling can be done on either the grid side or the backup side. However, if it is on the backup side, then the max.output power of the existing PV inverter must be less than the maximum output power of the Solis hybrid inverter.

4.4 Partial-Home vs Whole-Home Backup

This inverter is capable of providing AC power to home loads using PV and/or battery power in the event of a grid failure. When the inverter senses that the grid power has been lost, it automatically opens the relay between itself and the grid. It keeps the relay closed to the backup, allowing it to supply AC power to the home loads as long as power is available. The loads that are to be backed up will need to be located in a load center that is electrically isolated from the utility point-of--connection to ensure that the anti-islanding requirement remains unviolated. The inverter will automatically reconnect to the grid once it senses that power is restored.

The backup output of the inverter has the ability to handle unbalanced loads, with a load power range of 0-50% of the rated output power for each phase. It is recommended to evenly distribute the backup loads between the two phases during system installation. If a single phase load exceeds 50% of the inverter rated power, an overload alarm will trigger, and the inverter will temporarily shut down.

Partial-home backup systems should only have ***light loads*** backed up. This ensures that the battery does not deplete too quickly, allowing the PV power generated to balance the load demand. Light loads include lights, TVs, computers, routers, and most things that can plug into an outlet.

Whole-home backup systems can have all home loads backed up, including the ***heavy loads***. However, enough PV, battery, and (or) generator power must be available to meet the high current demand of the heavy loads. It is recommended to oversize the system for the needs of the owner.

4.4.1 Partial-Home Backup

The homeowner will need to be consulted to understand why they are installing a battery. It should also be determined how much power is consumed, how much power the PV will generate, how much storage power there will be, and which loads are to be backed up in the event of a power outage (grid failure). If they are willing to live with just a few key things such as the fridge, lights, and outlets, this is ***partial-home backup***, also known as dedicated loads backup. For this system, the loads that are to be backed up when the grid fails must first be identified in the main service panel. The breakers for these loads must be relocated into a new sub panel that will be connected to the backup side of the inverter.

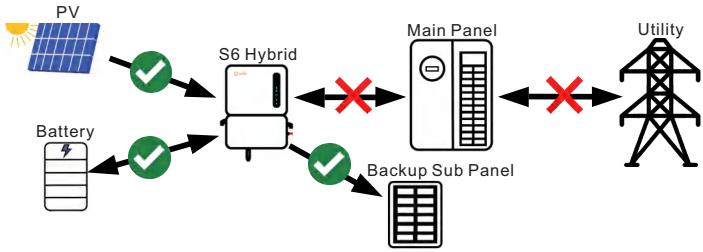

Figure 4.12 Partial-home backup with one S6 hybrid

4. Operating Modes

When grid power is lost, the inverter disconnects itself from the grid. It keeps the backup side energized using PV and battery power. When the grid is restored, it reconnects to the grid after a five minute period. While on-grid, the inverter is capable of passing power to the loads from the grid. Please see Figure 4.10 for more details on how much power can be passed to the loads depending on the inverter model. Multiple units in parallel can increase the amount of available pass through power.

In a partial home backup system, the loads that are to be backed up must be relocated from the main service panel to a new backup sub panel that is connected to the backup side of the inverter. The loads left in the main panel are not backed up when the grid fails.

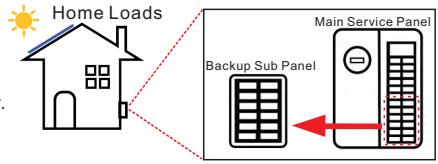

Figure 4.9 Dedicated loads for partial-home backup

Inverter Model	Maximum On-Grid Pass Through Power
S6-EH1P3.8K-H-US	3.8kW (31.7A)
S6-EH1P5K-H-US	5kW (31.7A)
S6-EH1P7.6K-H-US	7.6kW (31.7A)
S6-EH1P9.9K-H-US	9.9 kW (47.5A)
S6-EH1P10K-H-US	10kW (47.5A)
S6-EH1P11.4K-H-US	11.4kW (47.5A)

Pass-Through Power & Surge Capacity
There will be times when the loads on the backup side require more power than the inverter is able to provide with PV and battery power. The inverter is able to pass through power from the grid to the loads. The amount of current that the inverter can pass through varies depending on the model number of the Solis hybrid inverter. Installing multiple inverters in parallel increases the pass through power.

This chart shows the maximum continuous pass through power that each model can support. The **surge capacity** is 160% of the continuous for 10s. Ex: 11.4kW x 160% = 18.24kW for 10 seconds

Figure 4.13 Pass Through Power and Surge Capacity

4.4.2 Whole-Home Backup

For whole-home backup, the system must be able to pass through the same amount of power that the grid can provide. Service panels range typically range from 100-200A. Since the inverter can only pass through a maximum of 47.5A on its own, four inverters must be connected in parallel in order to achieve 190A of pass through power if a 200A main service panel is in place. If the home has a 100A main service panel, then two inverters must be installed to get 95A of pass through power.

It is very rare for a home with a 200A panel to consume 200A of power. Therefore, you must check the load consumption habits of the home when designing the system to determine how many inverters must be installed in order to have the required amount of pass through power capacity from the grid to the loads.

Solis is in the process of designing a hub that will have 200A of passthrough power regardless of how many inverters are installed. This hub will be released in the latter half of Q2 2025.

For now, paralleling multiple inverters together is the only way to achieve whole-home backup. The next section explains exactly how to achieve this.

4. Operating Modes

During the commissioning, one inverter gets designated as the master. The two inverters will then operate in tandem, with each one modulating the output power to match the home loads demand. If one inverter stops, the other one will continue to operate normally. The maximum backup output current is the sum of the two inverters together. For example, two 11.4K inverters could provide up to 95A (47.5A x 2) of continuous backup power with up to 152A of surge current for ten seconds.

4.5 Backup Power Inverter Paralleling

Up to ***three*** hybrid inverters can be installed together in parallel on the backup side of the system. The backup ports of each inverter would terminate in separate overcurrent protection devices within the backup load center. There is no limit for the number of inverters that can be paralleled together if they are only being paralleled on the grid-side.

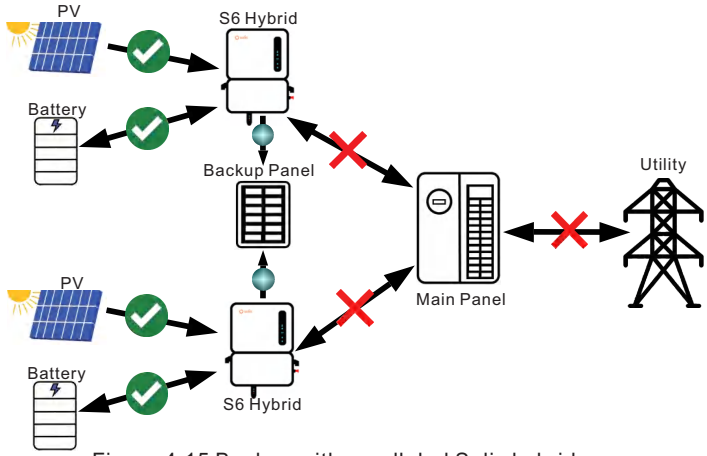

Figure 4.15 Backup with paralleled Solis hybrids

It should first be determined what the maximum continuous current needs to be in order to meet the energy demand of the home. Up to three S6 hybrid inverters can be installed in parallel with PV and batteries to provide continuous backup power. For example, three 11.4 kW hybrids in parallel can provide up to 142.5A (47.5A x 3) of power to the home loads in backup.

For a whole-home backup system, the average daily power consumed should be less than or equal to the average daily PV power produced over the span of a year. Otherwise, some loads should not be backed up during a grid failure. The chart in Figure 4.16 shows how much continuous backup power can be produced depending on how many inverters are installed in parallel and what size they are.

Solis S6 Hybrid Model	Total Maximum Continuous Backup Current					
	1 unit	2 units	3 units	4 units	5 units	6 units
S6-EH1P3.8K-H-US	15.8A	31.6A	47.4A	63.2A	79A	94.8A
S6-EH1P5K-H-US	20.8A	41.6A	62.4A	83.2A	104A	124.8A
S6-EH1P7.6K-H-US	31.7A	63.4A	95.1A	126.8A	158.5A	190.2A
S6-EH1P10K-H-US	41.7A	83.4A	125.1A	166.8A	208.5A	250.2A
S6-EH1P11.4K-H-US	47.5A	95A	142.5A	190A	237.5A	285A

Figure 4.16 Backup power chart based on Solis model and number of paralleled units

4. Operating Modes

Backup Combiner Load Center

In the diagrams of this manual a Backup Combiner Load Center is often shown that is additional to the Backup Home Load Center. The Combiner is not required, but it does provide additional breaker slots to host multiple inveter breakers if one is installed. A single backup load center can be installed if there is adequate space to host all of the home load breakers in addition to the inverter breakers, provided that it is compliant with the NEC.

4.5.1Paralleling Limitations and Restrictions

There are a few limitations to installing multiple inverters in parallel for backup power. Please note that these caveats do not apply when only paralleling on the grid-side. The restrictions shown below are only with respect to paralleling the backup-sides together. All inverters in the same system must be on the same firmware version. Please install one Solis data logger per inverter.

1. Paralleled inverters must be the same size (model number).

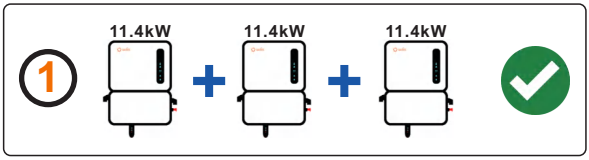

2. Do not parallel inverters that are different sizes (model numbers).

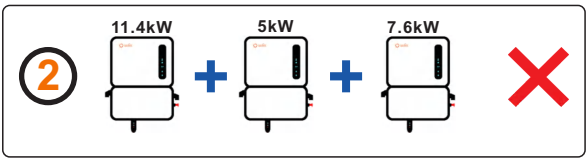

3. Paralleled inverters must have the same capacity (kWh), brand, and model of battery connected.

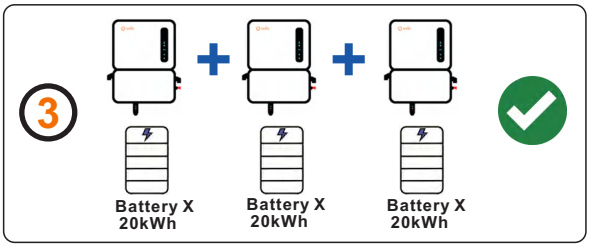

4. Do not install some inverters with batteries and some without batteries. Do not install different brand batteries on each inverter.

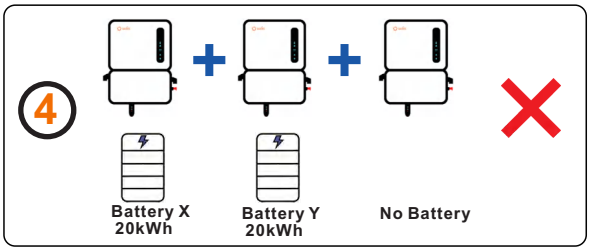

5. Do not install different sizes of batteries on each inverter. Each inverter needs to have the exact same battery connected.

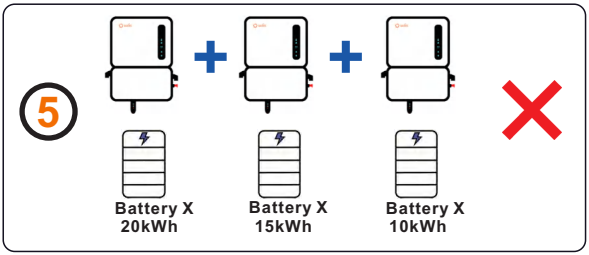

NOTE:
Please follow these guidelines to maintain the warranty status of the inverter.

4.5.2 Power Control System (PCS)

The Solis S6 hybrid inverter is UL 1741 PCS CRD certified. This means that the inverter is able to regulate the current and limit the loading on the busbars and conductors. The PCS can limit the power flow as to not exceed any busbar rating limits. With PCS, the 120% rule for breaker sizing becomes irrelevant, you can go up to the busbar rating. For the S6-EH1P11.4K-H-US model, the maximum controlled current on the busbar is 47.5A (11.4kW). The Export Only Mode is used to control the power delivered from the grid to the energy storage. system. Import Only Mode is used to control the power delivered from the ESS to the grid. The measured open loop response time is 1.95 seconds and the longest steady state time is 4.2 seconds.

S6-EH1P(3.8-11.4)K-H-US
Solis Hybrid Inverter

Chint DTSU666
Energy Meter

Chint DTSU666-CT
Current Transformer

or

Chint Rogowski Coil
Current Transformer

Figure 4.17 Components of a Solis PCS system

NOTE:
Every S6 hybrid comes with a meter and pair of DTSU666-CT. The SolisHub and Rogowski Coils are optional accessory components that must be purchased separately.

4. Operating Modes

Solis Power Control System (PCS) Operating Modes

1. Unrestricted Mode: This mode should be used when PCS is not required. The system is permitted to charge the batteries with grid power and can discharge-export battery power to the grid. This mode is enabled by default.

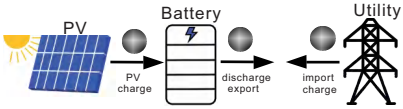

2. Import Only Mode: The system is permitted to charge the battery with grid power but is prohibited from discharge-exporting battery power to the grid.

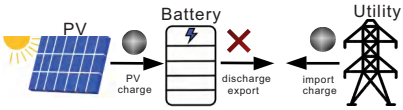

3. Export Only Mode: The system is permitted to discharge-export battery power to the grid but prohibits the use of grid power to charge the battery.

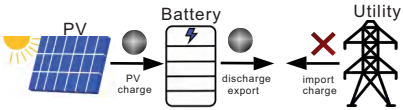

4. No Exchange Mode:. The system is only permitted to charge with PV power and can only discharge to cover loads. The system is prohibited from discharging battery power to the grid.

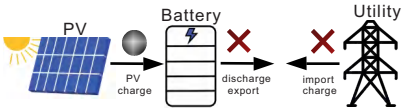

4.6 Generator Operation

The generator must be connected to the grid-side of the inverter. For purely off-grid systems, a generator can be used as a grid replacement. The generator must support dry contact. The inverter is able to use dry contact to turn on the Generator which can then charge the batteries and feed the home loads when the PV power is insufficient. The generator is turned off once the battery SOC reaches another specified limit.

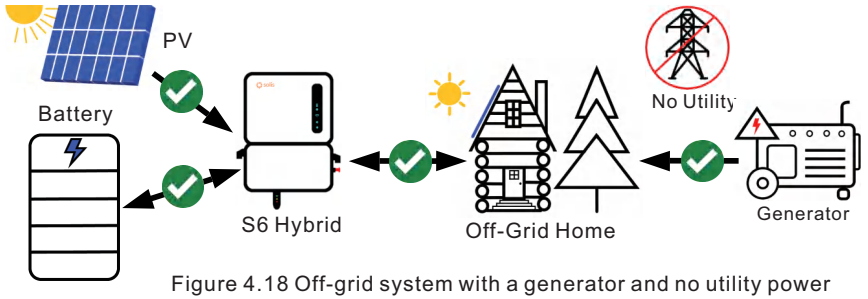

Figure 4.18 Off-grid system with a generator and no utility power

The Solis hybrid can work with a generator that is also connected to a grid. However, an external ATS must be installed with the generator. This ATS would not be produced by Solis. When the grid is lost the ATS will disconnect from the grid but not start the generator until the inverter sends the start signal using dry contact. The inverter will only send the start signal once the battery SOC discharges to the specified generator start SOC. Alternatively, the inverter and ATS do not need to be connected with a signal wire if the generator is set to come on automatically whenever there is a grid outage. In this type of system, the inverter will not know the difference between grid power and generator power. Be sure to widen the grid profile trip settings when using the generator as a grid substitute. This ensures smoother operation and less trips from frequency &voltage fluctuations. You must also keep the grid export power setting set to 0kW export as to not back feed the generator.

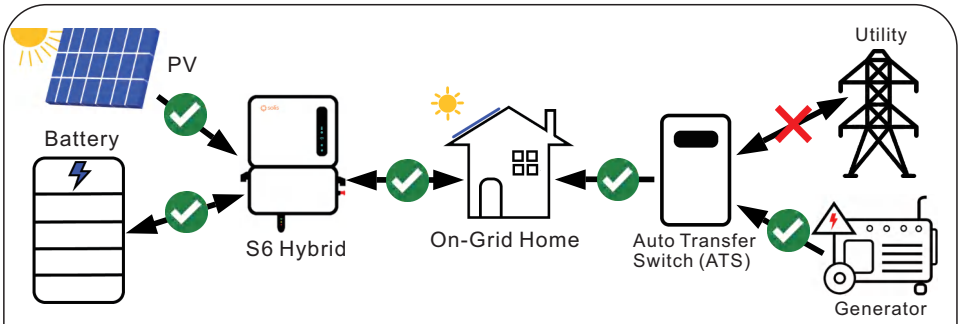

Figure 4.19 On-grid system in backup with a generator and ATS

NOTE:
The generator must be connected to the grid side of the inverter. Do not allow the backup side of the inverter to be connected to the generator.

NOTE:
The generator must be connected in 240V split phase configuration, otherwise it may result in phase loss in the inverter and the system will be unable to operate.

4.7 Wiring Diagrams

4.7.1 Partial-Home Backup with One Solis Hybrid

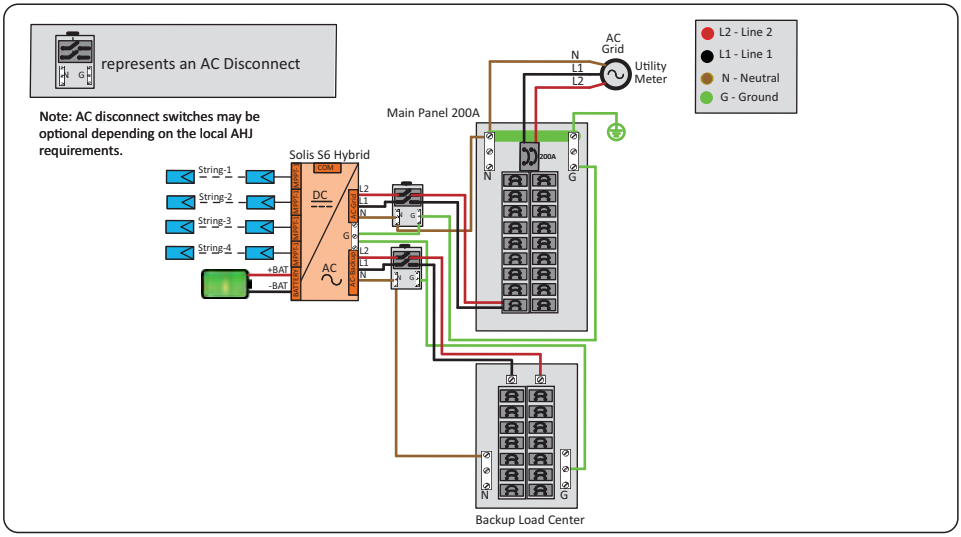

4.7.2 Partial-Home Backup with One Solis Hybrid and an AC-Coupled System

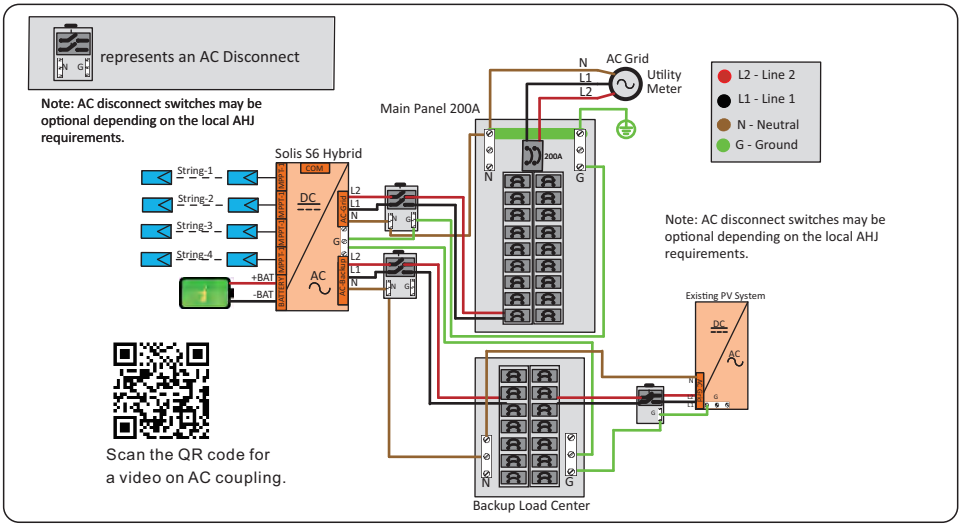

4. Operating Modes

4.7.3 Paralleled Solis Hybrid Inverters with Backup Power (PCS)

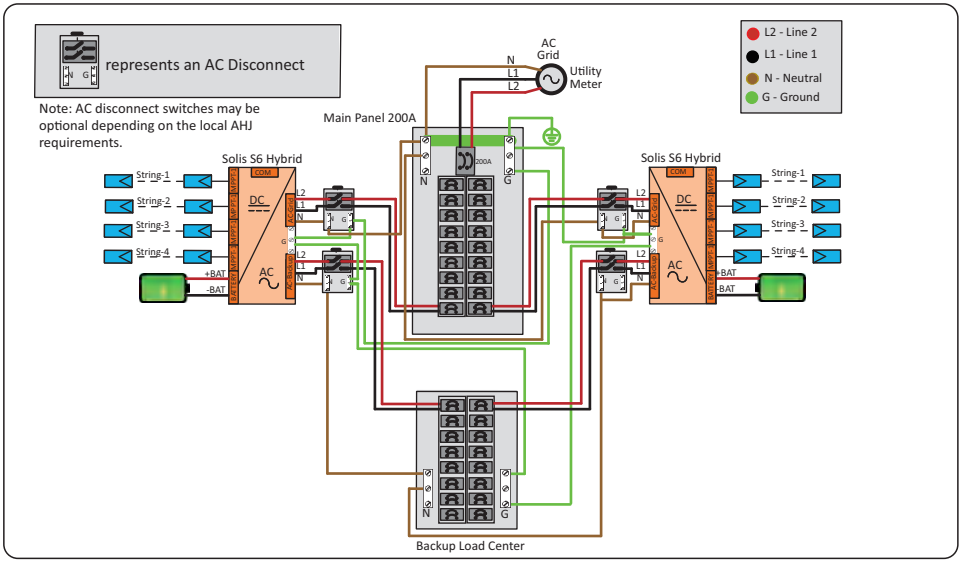

4.7.5 Off-Grid System with a Generator and One Solis Hybrid Inverter

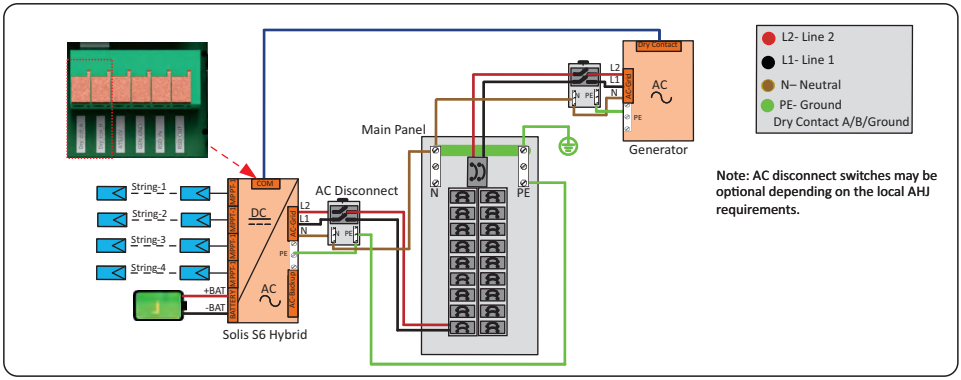

4.7.6 On-Grid System with a Generator/ATS and One Solis Hybrid Inverter

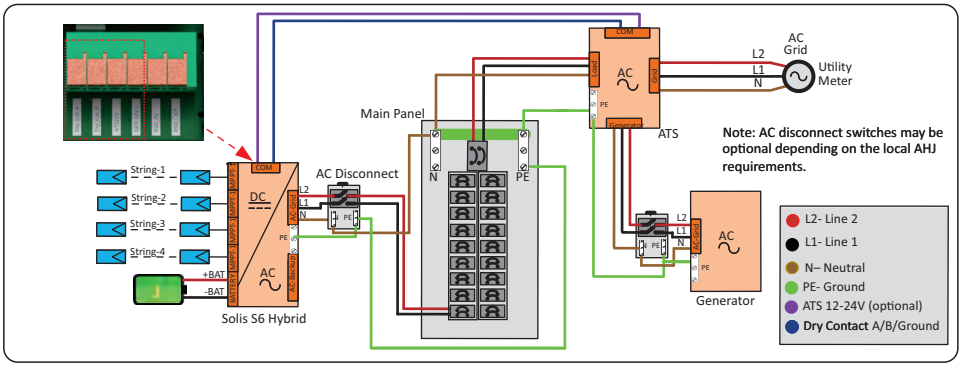

5. Installation

5.1 Select a Location to Install the Inverter

When selecting a location for the inverter, the following criteria should be considered:

- Exposure to direct sunlight may cause output power derating due to overheating
  It is recommended to avoid installing the inverter in direct sunlight. The ideal location is one where the ambient temperature does not exceed 40°C (140°F)

- It is also recommended to install the inverter somewhere the rain and snow will not land directly on it. The ideal installation location is on a north-facing wall under an eave.

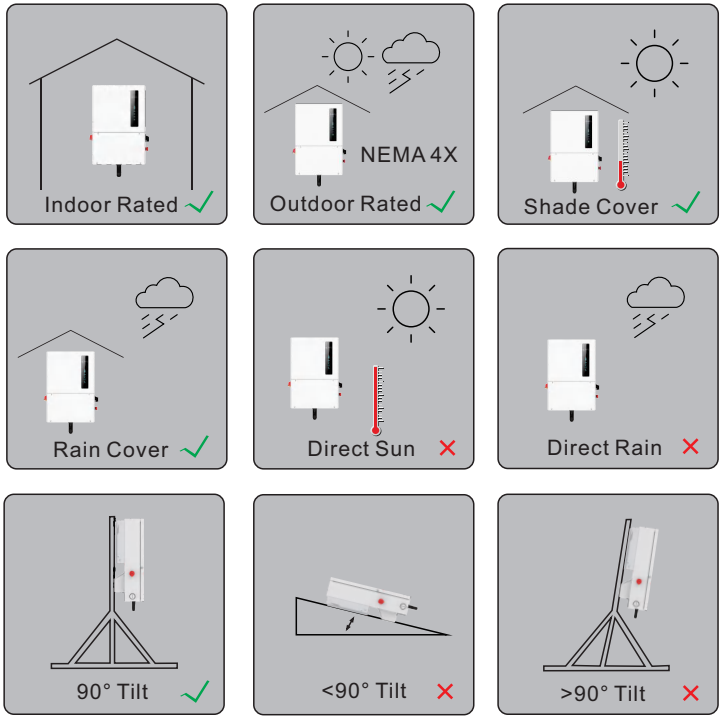

Figure 5.1 Recommended Installation locations

WARNING: Risk of Fire

Despite careful installation, electrical equipment can cause fires.

- Do not install the inverter in an area that contains flammable materials, liquids, or gases.
- Do not install the inverter in a potentially explosive environment.
- The structure on which the inverter is being mounted must be fireproof.

5. Installation

5.1.4 Avoiding direct sunlight

Installation of the inverter in a location exposed to direct sunlight should to be avoided.

Direct exposure to sunlight could cause:

- Power output limitation (with a resulting decreased energy production by the system).
- Premature wear of the electrical/electromechanical components.
- Premature wear of the mechanical components (gaskets) and user interface.

5.1.5 Air circulation

Do not install in small, closed rooms where air cannot freely circulate. To prevent overheating, always ensure that the air flow around the inverter is not blocked.

5.1.6 Flammable substances

Do not install near flammable substances. Maintain a minimum distance of ten feet (three meters) from such substances.

5.1.7 Living area

Do not install in a living area where the prolonged presence of people or animals is expected. Depending on where the inverter is installed (for example: the type of surface around the inverter, the general properties of the room, etc.) and the quality of the electricity supply, the sound level from the inverter can be quite high.

5.2 Inverter Handling

Please review the instruction below for handling the inverter:

1. The red circle below denotes the carrying handle cutout on the inverter box. Push in the cutouts on both ends of the box to form handles for moving the inverter.

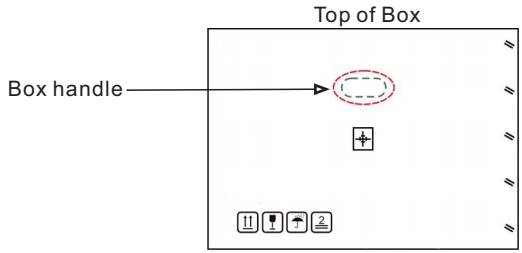

Figure 5.2 Handles for moving the inverter shown circled in red - one per side

2. Two people are required to carry and move the inverter while it is in the box.
3. When removing the inverter from the box, two people must use the handles integrated into the heat sink.
4. When setting the inverter down, do it slowly and gently. This ensures that the internal components and the outer chassis do not take any damage. Do not drop the inverter on any side from a height greater than 4 inches from the ground or it will cause damage.

5. Installation

When selecting a location for the inverter, consider the following:

WARNING: Risk of Shock

Despite careful installation, electrical devices present a shock hazard.

- Install the equipment out of reach of children if children may be present.
- Ensure that the equipment covers are always in place whenever the equipment is not being serviced.
- Never service live equipment. Always turn the equipment off first. Use a multimeter to verify that conductor voltages are zero.

CAUTION: Hot Surface

- The temperature of the inverter heat sink can reach 167°F. Do not touch the heat sink while the inverter is operating.

The ambient temperature and relative humidity of the installation environment must meet the following requirements:

Maximum Temperature	Minimum Temperature	Max. Relative Humidity	Maximum Altitude
140°F 60°C	-13°F -25°C	100% Non-Condensing	13,123 feet 4,000 meters

Figure 5.3 Installation environment conditions

Load bearing structure requirements:

Made of nonflammable materials

Max. load bearing capacity ≥ 4 times of inverter weight

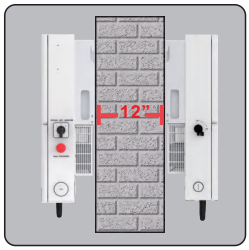

Figure 5.4 Load bearing structure

5.2.1 Clearances

- If multiple inverters are installed on site, a minimum clearance of 12 inches should be kept between each inverter and all other mounted equipment. The bottom of the inverter should be at least 20 inches above of the ground or floor (see Figure 5.5 on page 23).
- The LED status indicator lights located on the inverter's front panel should not be blocked
- Adequate ventilation must be present if the inverter is to be installed in a confined space.

5.2.2 Consult technical data

- Consult the technical specifications sections at the end of this manual for additional environmental condition requirements (temperature range, altitude, etc.)

5.2.3 Angle of installation

- This model of Solis inverter must be mounted vertically (90° degrees not greater or less than 90° degrees straight up).

5.3 Inverter Dimensions

5.3.1 Dimensions of S6-EH1P(3.8-5)K-H-US Models: 3.8 kW and 5 kW

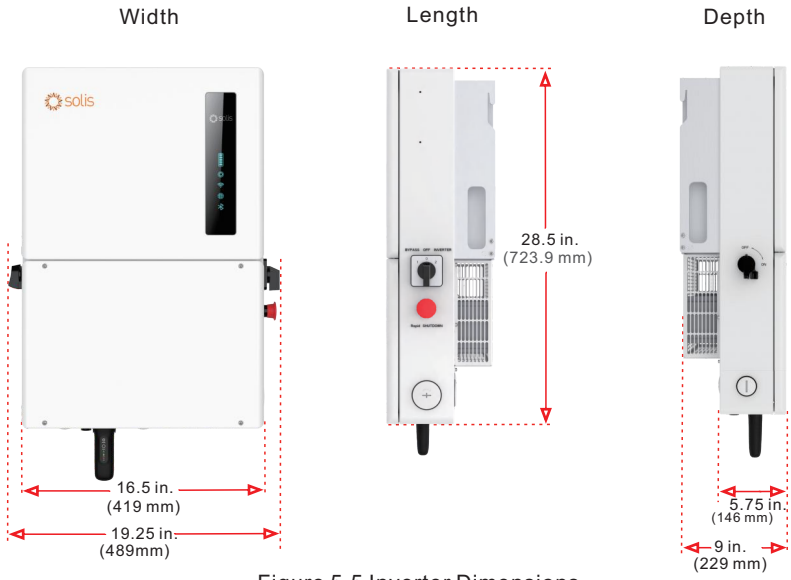

Figure 5.5 Inverter Dimensions

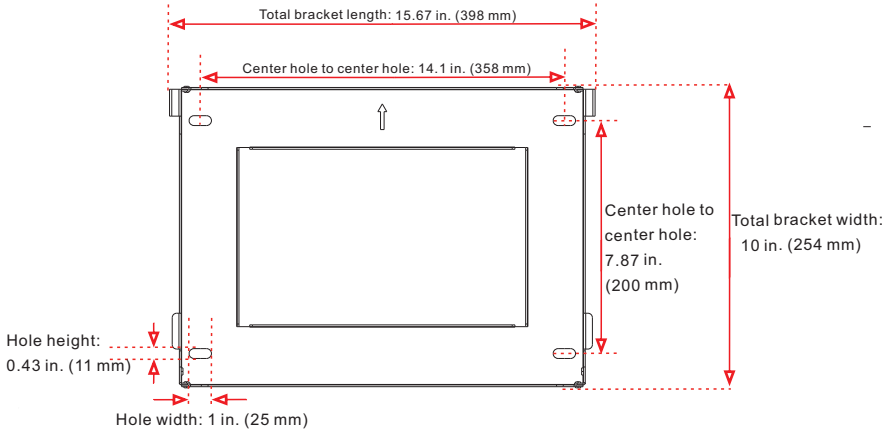

Figure 5.6 Inverter Bracket Dimensions

5.3.2 Dimensions of S6-EH1P(7.6-11.4)K-H-US Models: 7.6 kW, 9.9 kW, 10 kW, and 11.4 kW

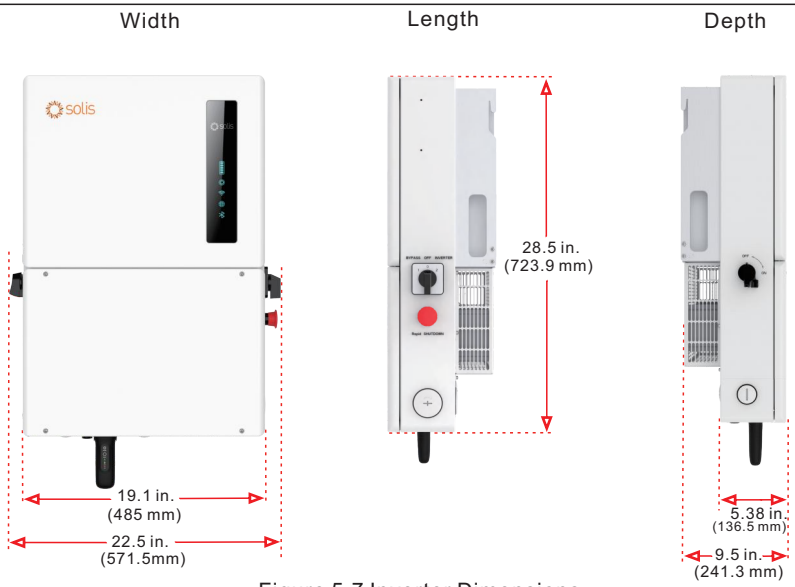

Figure 5.7 Inverter Dimensions

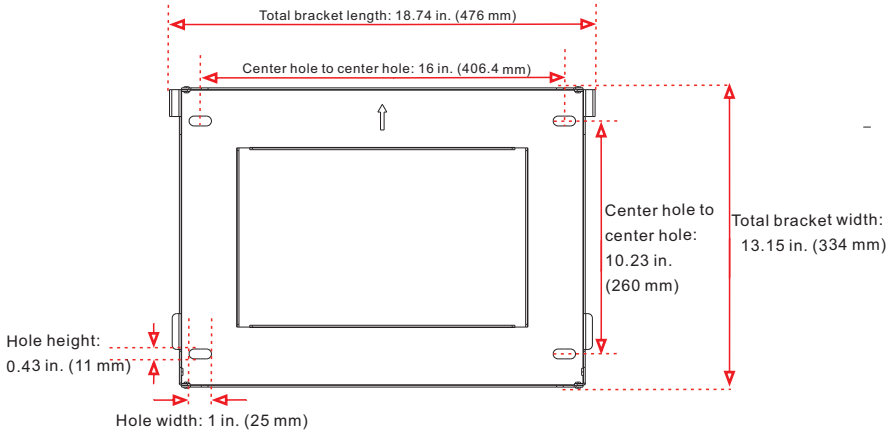

Figure 5.8 Inverter Bracket Dimensions

NOTE:
The inverter mounting bracket must be fastened to a wall stud.
This ensures that the wall is able to support the weight of the inverter.

5. Installation

5.4 Mounting the Inverter

- Mount the inverter on a wall or structure capable of bearing the weight of the machine
- The inverter must be mounted upright on a vertical structure with a tilt of 90°. A tilt greater or less than 90° may cause the inverter output power to derate.

- To prevent overheating, be sure that the inverter has adequate air flow around it. A minimum clearance of 12 inches (305mm)should be kept between inverter & other equipment. 20 inches (508mm) of clearance between the bottom of the inverter and the ground.

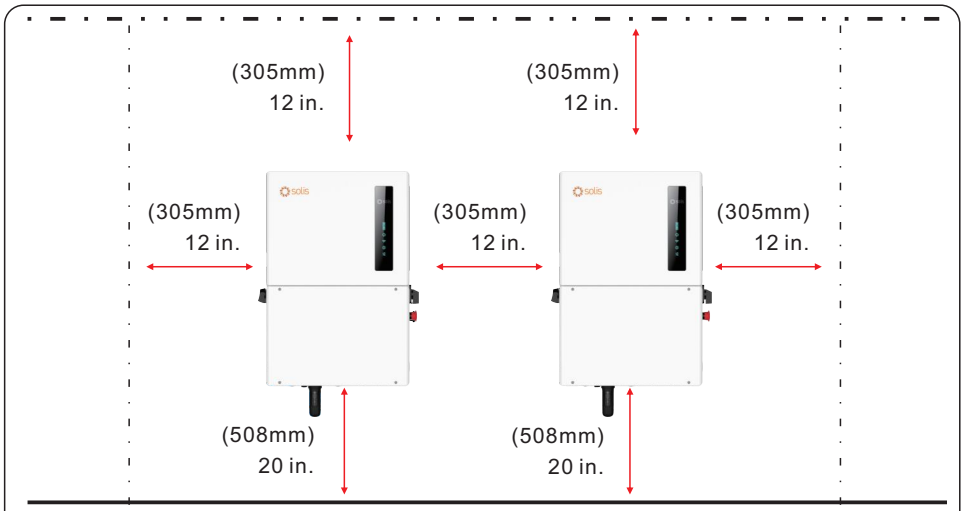

Figure 5.9 Inverter Mounting Clearances

- Visibility of the LED indicator lights should be considered. Ideally, the indicator light would be at eye-level.
- Adequate ventilation around the inverter must be provided.

NOTE:
Nothing should be stored directly on top, underneath, or against the inverter.

- When the inverter is mounted on the wall, it sticks out approximately 9.5 inches.
- Keep this in mind when selecting the installation location for the inverter. The exact dimensions of the inverter and the mounting bracket are on the next page.

Once a suitable location has been found according to Figures 5.3 and 5.4, use figures 5.6 and 5.7 to mount the bracket to the wall. You may drill additional holes in the bracket if you need to you need to. The steps for mounting the inverter are listed below:

1. Place the bracket on the wall and use a bubble level to make sure it is level. The arrow in the middle of the bracket points up. With a pencil or marker, mark the mounting holes. Use a drill to prepare the holes for fasteners. Fasten the bracket to the wall, **be sure the fasteners go into wall studs**.

5. Installation

NOTE:
The inverter must be mounted vertically at a 90° angle.
Four fasteners must be used to ensure the bracket does not come off the wall. At least two must embed in a wall stud to bear the inverter weight.

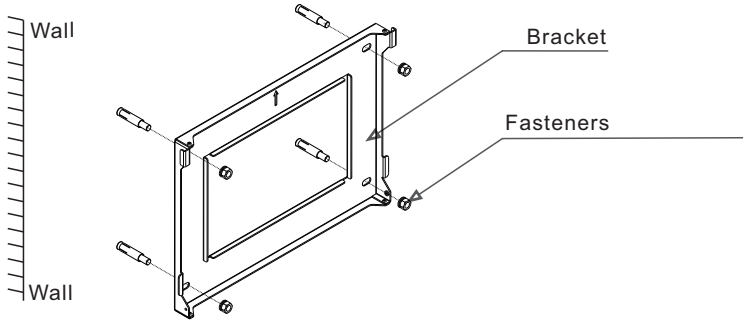

Figure 5.10 Fix the bracket to the wall

2. Lift up the inverter and align the back two hooks on the heat sync with the two tabs on the inverter mounting bracket. Lower the inverter hooks down onto the mounting bracket tabs and ensure the hooks have a solid bite before releasing the inverter. Then install the two set screws that are included with the inverter for stabilization.

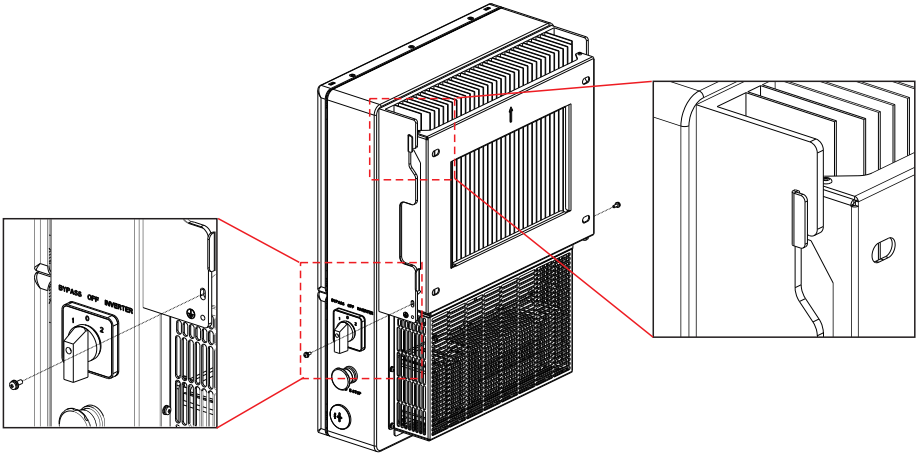

Figure 5.11 Inverter on mounting bracket and set screws

WARNING:
The inverter is very heavy. Please use proper lifting techniques to avoid potential injury. It is recommended that two people lift the inverter together.

5.5 Inverter Wiring Overview

	Purpose	Connection Points
PV Cables	PV DC connection to the inverter	From the PV array to the DC+ and DC- terminals in the inverter
Battery Cables	Battery DC connection to the inverter	From the battery (+) and (-) terminals to the inverter BAT+ and BAT- terminals
AC Grid Cables	Inverter AC connection to the main service panel	From the OCPD in the main service panel to the AC-GRID L1 and L2 terminals
AC Backup Cables	Inverter AC connection to the backup subpanel	From the backup loads subpanel OCPD to the inverter AC-BACKUP L1 and L2 terminals
Ground Cables	Grounding conductors for the system	From the main service panel ground bar to the ground bar inside the inverter wire box
Meter RS 485 cable	Communication between inverter & meter	From meter to terminal Meter_A and Meter_B. For more details, refer to figure 4.2.2 Installing the energy meter
Battery CAN cable	Communication between the inverter & the battery	From battery to terminal CAN-L and CAN-H. For more details, refer to figure 4.2.3 Installing the battery
Data Logger	Monitoring of the system on SolisCloud	USB COM port at the bottom of the inverter (For more details, please refer to the Solis data logger product manual)

Figure 5.12 System Cable Connections

Conductor, conduit, and overcurrent protection device sizing shall be done in accordance with the NEC and local electrical codes & standards.

The Operating Modes section 4.7 of this manual contains wire diagrams that show how the equipment interconnects. Please use the wire diagrams when planning the conduit paths & determining the wire number and size requirements.

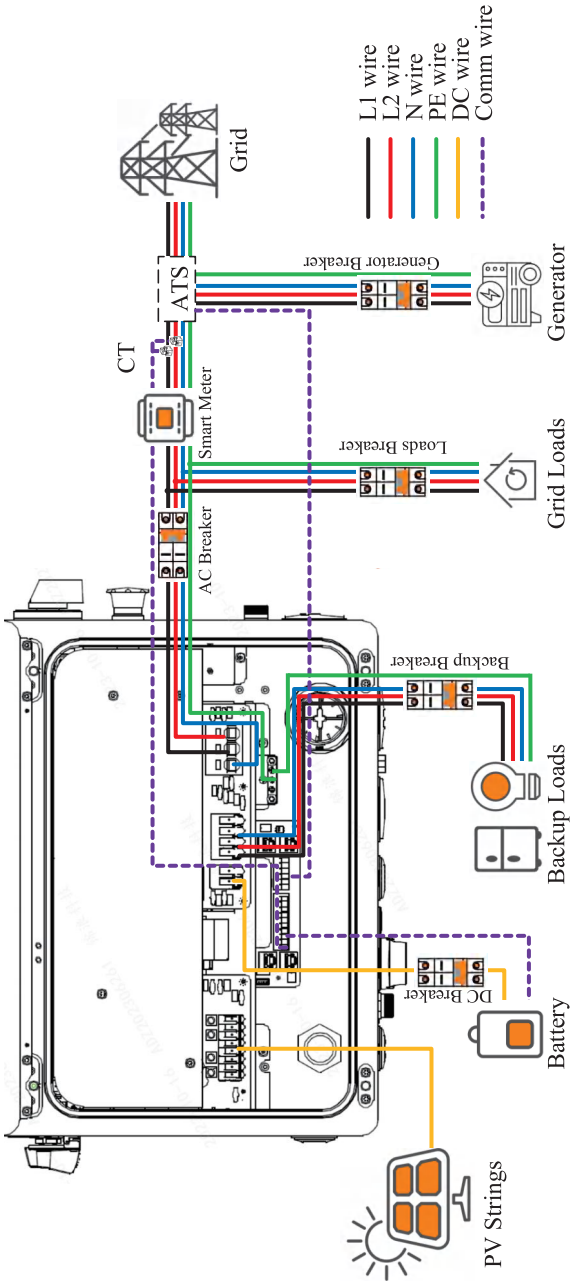

Figure 5.13 System wiring diagram with Generator and ATS

5.6 Equipment Grounding

Within the inverter wire box there is a ground bar for the equipment grounding conductors to terminate. All equipment grounding conductors (EGCs) must be terminated in this bar. If there is not enough terminal space for all of the EGCs, please use a multi-port connector to provide additional terminals.

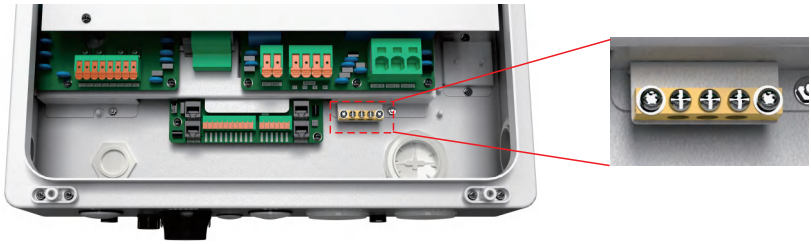

Figure 5.14 Internal Grounding Conductor Terminal Location

Steps for connecting grounding conductors to the ground terminal strip:

1. Strip ½ inch of insulation off the end of the ground conductor.
2. Use a Phillips #2 screwdriver to loosen the terminal screw in the ground bar
3. Insert the stripped end of the grounding conductor into the now open terminal.
4. Tighten the screw until snug, be careful not to over tighten and strip the screw.
5. Give the conductor a gentle tug test.

There is also an external terminal on the chassis of inverter for a grounding conductor to connect

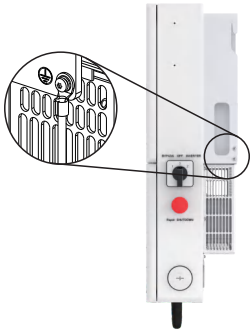

Figure 5.15 External Grounding Conductor Terminal Location

IMPORTANT:
For multiple inverters in parallel , all units must be connected to the same ground point to eliminate the possibility of a voltage potential existing between inverter grounds.

5. Installation

5.7 PV Cable Installation

DANGER:

Before installing the PV cables, be sure that the PV array is disconnected. Use a multimeter to verify that the PV string voltages are 0V before proceeding. If rapid shutdown is being used, then under 30Vdc per string is safe.

Please verify the following before connecting the PV strings to the inverter:

- Ensure the DC voltage of the PV strings will not exceed the maximum DC input voltage (600Vdc). Violating this condition will void the inverter warranty.
- Ensure the polarity of the PV strings are correct (ex: positive is positive).
- Ensure the DC-switch, battery, AC-Backup, and AC-Grid disconnects are all off.
- Ensure the PV resistance to ground is higher than 20K ohms.
- Ensure that the Isc of the strings will not exceed the maximum DC input current.

Note: Each PV string input is a separate MPPT

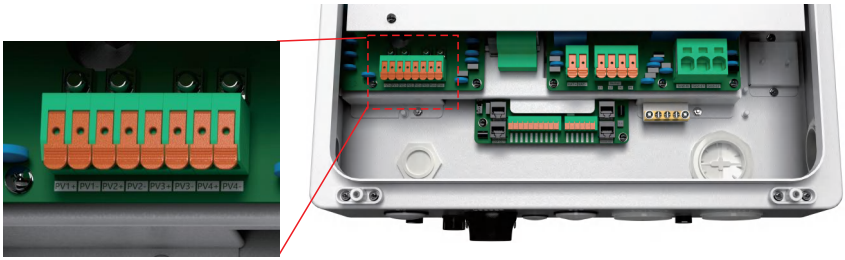

1. Strip ½ inch of sheath off the ends of each PV cable.
2. Pull up on the orange lever above the PV terminal, this opens the terminal gate.
3. Insert the end of the PV cable into the now open terminal.
4. Release the orange level and the terminal gate will clamp down on the PV cable.
5. Give the PV cable a gentle tug test to ensure that the connection is tight.
6. If the connection feels loose, repeat steps 1-5 again but push the cable deeper into the terminal before releasing the lever.

Figure 5.16 PV Cable Connection

CAUTION:

If the DC conductors are accidently connected in reverse or if the inverter is not working properly, do NOT turn off the DC switch. Otherwise, it may cause a DC arc and damage to the inverter or a fire.

The steps for corrective actions are as follows:

*Use a DC amp clamp multimeter to measure the DC string current.

*If the current is above 0.5A, please wait for the irradiance on the PV array to diminish until the current drops below 0.5A.

*Once the current is below 0.5A, you are allowed to open the DC switch and and then disconnect the PV strings from the inverter.

* In order to completely eliminate the potential for failure, leave the PV strings disconnected until the cause of the reverse polarity is corrected.

5.8 Rapid Shutdown

5.8.1 Integrated Rapid Shutdown

Important Note

The inverter can be ordered with an internal rapid shutdown transmitter. This transmitter brand must match the receivers that are being installed with the PV modules. **Not abiding by this will void the inverter warranty.**

How the inverter achieves module-level rapid shutdown:

The internal transmitter generates a PLC signal when it receives AC power. This signal travels up the PV strings to the receivers that are connected to the PV modules. When the receivers get this signal, they turn on and allow the string voltage to ramp up. When the receivers lose this signal, they turn off. When the receivers are off, each PV module only puts out less than 1VDC.

The red “Rapid Shutdown (RSD E-Stop) switch disables the internal transmitter

Rapid Shutdown Initiation Process

1. Press the switch button in to turn off the internal transmitter. This will initiate rapid shutdown of the PV (ramps the PV voltage down)
2. Twist the switch clockwise to turn the transmitter back on. This will brings the PV voltage back up to normal.

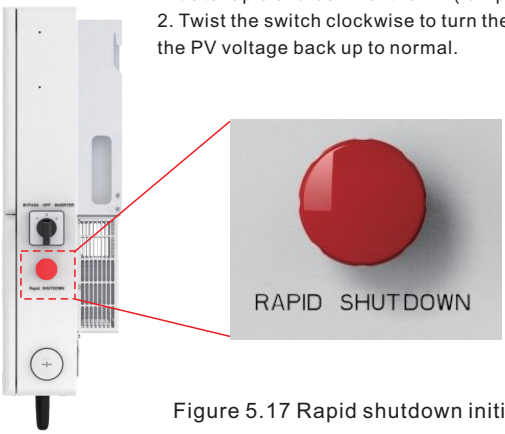

Note:

Rapid shutdown will only initiate if receivers have been installed in the PV array connecting to the PV modules directly.

Without the receivers, rapid shutdown is not possible.

Figure 5.17 Rapid shutdown initiation switch and process

Additional Details About Rapid Shutdown

1. With rapid shutdown receivers installed, the PV string voltages should be very low. Depending on the receiver type, you should be measure between 0.6 and 0.7Vdc per module. Example: x10 modules = 6V-7V for the whole string
2. If the PV string voltages are low, check that the AC breaker is turned on so that the inverter is getting AC voltage and that the rapid shutdown switch is popped out. Give the switch a twist clockwise to verify that is popped out.
3. The DC switch does not have to be turned on for the receivers to get the PLC signal from the internal transmitter. However, if an external DC switch is installed, ensure that it is turned on or else the receivers will not be able to get the PLC signal from the transmitter.

IMPORTANT:

Consult the manual(s) of the rapid shutdown equipment supplier. These manuals must also be followed carefully to ensure normal operation.

5. Installation

Please see the Compatibility Sheet for details on which internal transmitter options are currently available for the Solis S6 hybrid inverter.

5.8.2 Photovoltaic Rapid Shutdown System (PVRSS) Certification

The Solis S6 hybrid is PVRSS-certified with several brands that manufacture rapid shutdown equipment. The certification includes the inverter, the PLC transmitter, and the receivers. The transmitter is located within the inverter, the receivers are installed with the PV modules. To avoid violating the PVRSS certification, the same brand of receivers must be installed as the internal transmitter. (Ex: Tigo transmitter with Tigo TS4-A-F receivers). There can be no mixing of different brands without violating both the PVRSS certifiaction and the rapid shutdown equipment warranty. For this reason, please be sure to check the Compatibility Sheet and only install equipment that is matched under the same brand. The only exceptiown to this is Midnite Solar receivers, which can be used with either Tigo or APS transmitters.

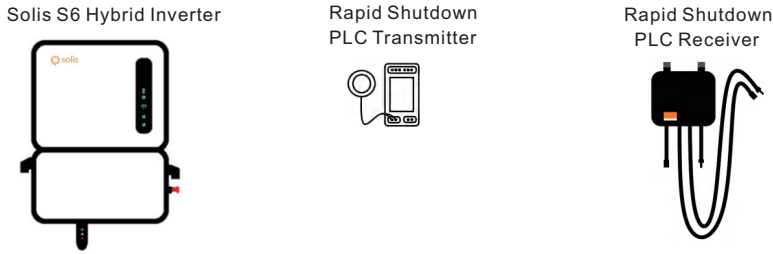

Figure 5.18 Components Listed in a Photovoltaic Rapid Shutdown System (PVRSS) Certification

Batteries and PV modules are not listed (specified) in the PVRSS certification. The transmitter can come integrated inside of the inverter, but it must be ordered with the correct internal transmitter. Alternatively, the transmitter can be installed externally in a separate enclosure.

5.8.3 Multiple Inverters with One External Transmitter

If multiple inverters will be installed in parallel, it is ideal to use a single external rapid shutdown transmitter. This prevents cross-talk from occurring because there will only be one transmitter for all of the PV strings in the system. Run all of the strings through the external rapid shutdown enclosure first and then to each inverter. Cores can handle up to 10 strings each. Some transmitters allow for, two cores to be connected, meaning up to 20 strings can be supported by one external transmitter.

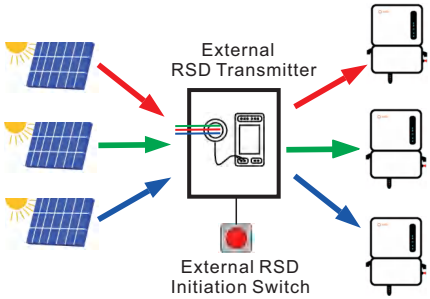

Note: Hybrid inverters shown do not have internal transmitters or have their internal transmitters disabled.

5.19 Multiple Inverters with a Single External RSD Transmitter

5.8.4 Cross-Talk

Cross-talk occurs when competing PLC signals sent from different transmitters reach the same RSD receivers. This causes the receivers to randomly cycle on and off at various times. Cross-talk must be avoided at all costs. If multiple transmitters must be used, then it is important to keep the PV leads going from each inverter to the arrays separated by one foot minimum. Some transmitters, like NEP, synchronize through the cloud. Other transmitters, like Tigo, can be physically wired together in a daisy-chain. Be sure to understand what kind of cross-talk protection the transmitter uses so that the system can be designed to eliminate any chance of cross-talk happening. If an external rapid shutdown transmitter is going to be used and the inverter has an integrated transmitter, then the integrated transmitter must be disabled to prevent cross-talk.

5.8.5 Multiple Inverters with Multiple Integrated Tigo Transmitters

Tigo transmitters can be daisy-chained together with two wires. This allows the transmitters to synchronize such that cross-talk between transmitters is eliminated. With this type of installation, an external RSD transmitter box is not required. Link the internal transmitters together so that the PLC signals become synchronized. Engaging the RSD initiation switch on the inverter wire box will initiate rapid shutdown for all of the inverters.

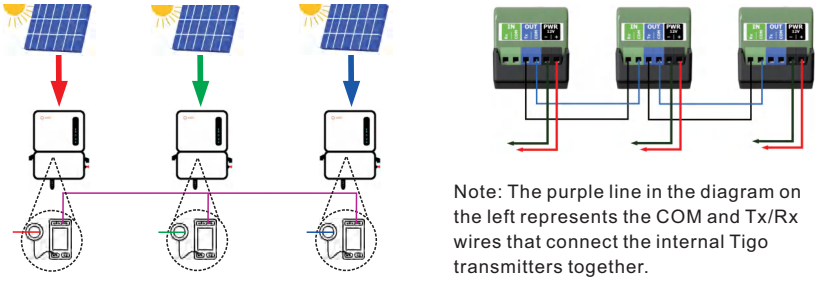

Note: The purple line in the diagram on the left represents the COM and Tx/Rx wires that connect the internal Tigo transmitters together.

5.20 Multiple Inverters with Multiple Internal Tigo Transmitters

5.8.6 External Rapid Shutdown

If the inverter is being installed where it is inaccessible to first responders, an external rapid shutdown switch must be installed somewhere it is accessible.

Steps for Installing an External Rapid Shutdown Initiation Switch

1. Install the external RSD switch and run two wires between it and the inverter
2. Remove the red jumper from the RSD_IN and RSD_OUT terminals (see Figure 5.15)
3. Connect one end of the two wires to the RSD_IN and RSD_OUT terminals
4. Connect the other end of the two wires to the external RSD switch

Note: the RSD switch on the inverter wire box will still initiate rapid shutdown. Be sure the transmitter is on by giving the switch a clockwise twist when you are ready to energize the system.

IMPORTANT:

Installing module-level power electronics (MLPE) not listed on the Compatibility List will void the inverter and the MLPE warranties.

5. Installation

NOTE:
Only remove the jumper when installing an external rapid shutdown switch. Otherwise, do not remove the jumper, as doing so will cause the inverter to stop.

The external rapid shutdown initiation switch is sold separately. Please contact your local supplier for help with procurement.

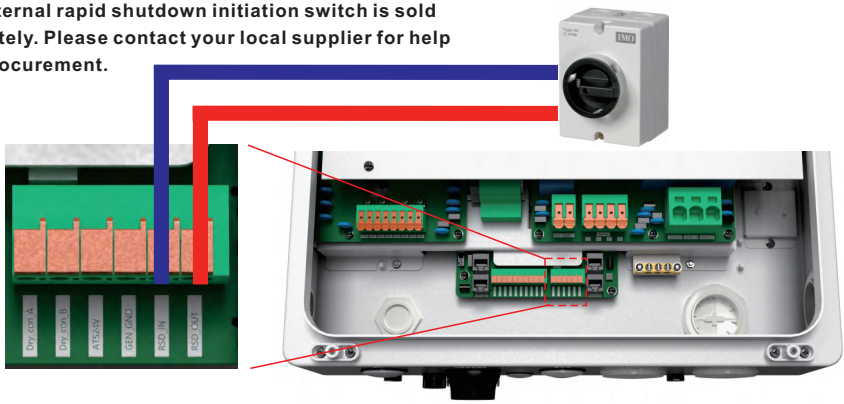

Figure 5.21 External RSD Initiation Switch

5.8.7 How to Disable the Internal Rapid Shutdown Transmitter

These steps apply to Tigo, APS, and NEP transmitters only. Enteligent transmitters cannot be disabled. Please do not use the RSD switch to disable the internal transmitter.

Step 1: Make sure the inverter is completely off. Both DC and AC disconnect switches must be opened prior to proceeding any further. Use a multimeter to verify that the AC voltage is 0V at the inverter terminals.

Step 2: Remove the protective cover plate by taking out the five Torx T20 fasteners shown below.

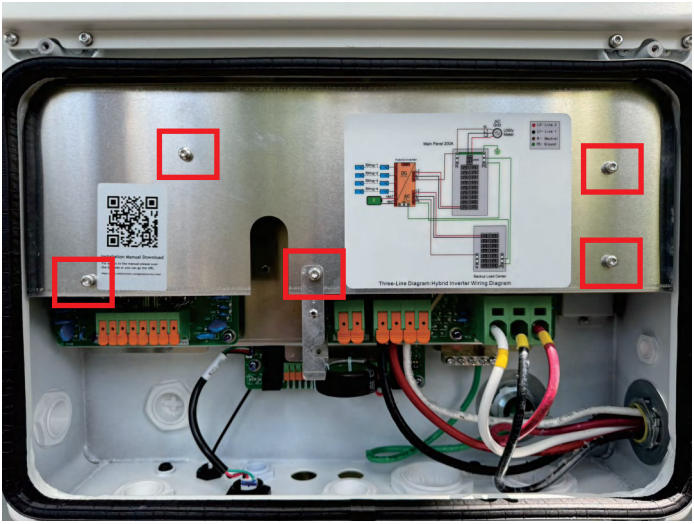

5. Installation

Step 3: Locate the internal transmitter. The transmitter will be in the same place regardless of the brand. The only exception is Enteligent, which does not have an accessible transmitter and cannot be disabled. Shown below is an internal Tigo transmitter, for example.

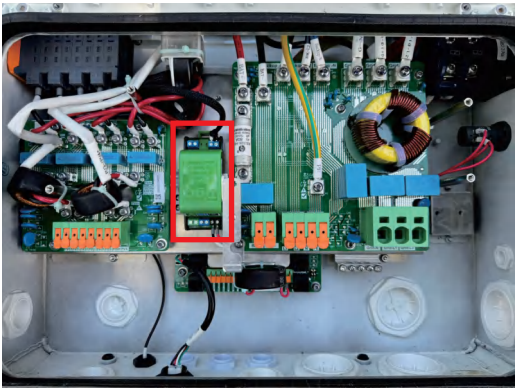

Step 4: Using a technician screwdriver, loosen the two terminals boxed in red. These are for the core that induces the PLC signal. Remove the two wires from the terminals.

Step 5: Use electrical tape to cover the ends of the two core wires. Ensure the taped off wires are kept out of the way. Replace the metal cover plate with all five T20 fasteners.

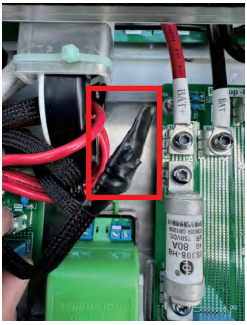

5. Installation

5.9 Battery Installation

DANGER:
Before installing the battery cables, be sure that the battery is turned off.
Use a multimeter to verify that the battery voltage is 0Vdc before proceeding.
Consult the battery product manual for instructions on how to turn it off.

1. The battery (+) and (-) cables shall only be connected to the inverter BAT terminals.
2. Run the cables into the wire box. Strip ½ inch off the ends of each cable.
3. Insert a technician screwdriver into the slots of the squares below the BAT terminals
4. Push in with the screwdriver, insert the cable, and release the screwdriver
5. Give the battery a gentle tug test to ensure the connection is tight
6. If the connection feels loose, repeat steps 1-5

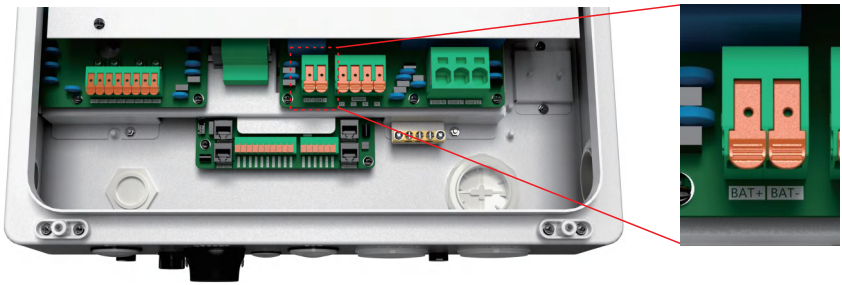

Figure 5.22 Battery Cable Connection

Battery Compatibility

This inverter only works with specific battery models. Please consult the Battery Compatibility table on page 54 for which battery models this inverter will support. **Installing a battery that is not on the Compatibility List will void the inverter warranty.**

Black Start

In a situation where there is no grid and no PV, the inverter is able to use the battery to black start. However, not all compatible batteries support this function. Be sure to consult the battery manual to determine if it is able to support black start without a start-up signal from the inverter.

NOTE:
Before connecting the battery, please carefully read the product manual of the battery and perform the installation exactly as the battery manufacturer specifies in the manual

Model	S6-EH1P(3.8-5)K-H	S6-EH1P(7.6-11.4)K-H
Battery Cable Max. Wire Size Accepted by Terminal	8 AWG	6 AWG

Figure 5.23 Battery cable size limitations

5. Installation

5.10 AC Wiring

5.10.1 AC Terminals

(3.8-5)K (7.6-11.4)K

Figure 5.24 AC output terminals

The inverter has two AC outputs: (1) to a backup service panel and (2) to the main service panel which is connected directly to the utility. When utility power is lost, the Grid-side of the inverter shuts off. The Backup-side of the inverter stays energized as long as there is enough PV and battery power to support the loads on the Backup-side. The inverter can be connected to other S6 hybrids in parallel to provide additional support to the backup loads. Generator support will be available in Summer 2023.

Model	S6-EH1P(3.8-5)K-H	S6-EH1P(7.6-11.4)K-H
AC Grid Cable Max. Wire Size Accepted by Terminal	6 AWG	4 AWG
AC Backup Cable Cross Sectional Area	8 AWG	6 AWG

Figure 5.25 AC cable size limitations

Over-Current Protection Device (OCPD) for the AC sides

To protect the inverter, we recommend installing a device for protection against over-current and leakage, based on the following current ratings noted in Figure 5.26

Inverter Model	Grid Max Output Current	Grid Max Input Current	Backup Rated Output Current	Backup Max Output Current (10 sec)
S6-EH1P3.8K-H-US	15.8A	23.8A	15.8A	25.4A
S6-EH1P5K-H-US	20.8A	31.2A	20.8	33.3A
S6-EH1P7.6K-H-US	31.7A	47.6A	31.7A	50.7A
S6-EH1P9.9K-H-US	41.3A	61.9A	41.3A	50.7A
S6-EH1P10K-H-US	41.7A	62.6A	41.7A	66.7A
S6-EH1P11.4K-H-US	47.5A	71.3A	47.5A	76A

Figure 5.26 Current ratings for sizing the OCPD

5.10.2 Installing the AC cables

WARNING:

Conductors terminated in the backup ports of the inverter must be connected to an isolated load center that is not directly connected to the utility. This ensures that the system complies with anti-islanding requirements.

Steps for installing the AC grid and backup conductors

1. Bring the AC cables for the backup loads panel (backup) and the main service panel (grid) into the inverter wire box. The backup loads panel should not be directly connected to the main service panel.
2. Strip ½ inch of insulation from the ends of each cable
3. Insert a technician screwdriver into the small hole above the wire terminal
4. Push in with the screwdriver and insert the wire into the terminal
5. Release the screwdriver and the terminal clamp will bite down on the wire 6
6. Give the wire a gentle tug test to ensure it is tight
7. If the wire feels loose, repeat steps 3-6
8. Connect the other ends of the AC cables in the main service panel to a breaker and neutral bus
9. Connect the other ends of the AC cables in the backup service panel to the panel lugs or to a breaker
10. Keep the breakers and AC bypass switch OFF for now, turn them on when doing commissioning.

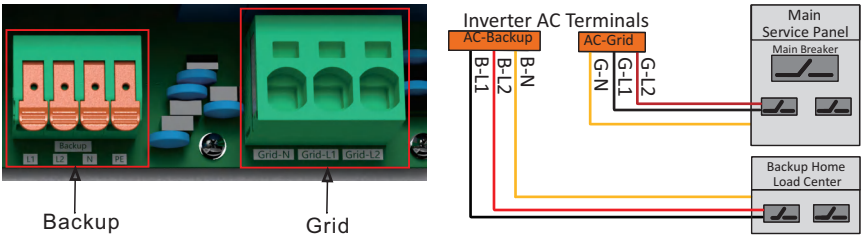

Figure 5.27 Simplified AC wiring diagram

5.10.3 Steps for Installing the Backup Home Load Center

1. Once you have determined which breakers supply power to the things that are to be backed up, mark the breakers so that you will be able to identify them once the panel cover is off.
2. Shut off power to the house so that it is safe to work inside of the main panel (or subpanel).
3. Remove the panel cover, use a multimeter to verify that the panel is deenergized.
4. Turn off the breakers that are to be relocated, remove the wires from them and then cap off the wires for now. Remove the breakers and then install them into the backup loads panel.
5. Run separate wires from the main panel (or subpanel) to the backup loads panel. You will need to run one wire for each breaker that you are relocating.
6. In the main panel, connect the cables that you ran to the backup loads panel to the circuit cables that you capped off earlier. This can be done with wire nuts or something similar.
7. In the backup panel, terminate the wires in the breakers that you moved from the main panel.
8. Be sure to label the breakers in the backup loads panel so that they can be identified.

IMPORTANT:

L1/L2 phases must match polarity at all points in the system. This rule applies to both paralleled and AC-coupled inverters. Use a multimeter to verify the polarity.

5.10.4 AC Bypass Switch

This failsafe switch determines the power source for the inverter backup circuit. If the inverter fails or has a critical alarm, the backup circuit will shut off. Should this occur, the switch set to 1 allows power to pass through the inverter to the backup from the grid. The loads will still be powered by the PV and batteries but the backup loads will remain energized should the inverter have an alarm or failure.

AC Bypass Switch Positions

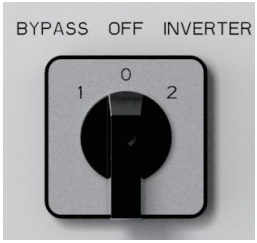

BYPASS (1) the backup circuit will remain energized in the event of an inverter failure or alarm. However, if the grid power fails then the backup loads will lose power.

OFF (0) the backup circuit is disconnected from the inverter. Switching to OFF will de-energize the backed up loads. This switch is not an AC disconnect switch. Setting the switch to the OFF position does not turn off AC power to the inverter.

INVERTER (2) the backup circuit will remain energized in the event of a grid power failure. However, if the inverter has an alarm or failure itself then the backup loads will lose power until the issue is resolved.

NOTE:
The AC bypass switch should be set to the bypass position whenever a firmware upgrade is being done. This ensures the backup loads remain powered.

Unstable Grid - Inverter

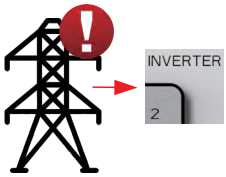

Systems that experience frequent grid blackouts, or have an overall unstable grid in general should the Inverter (2) setting of the bypass switch. This ensures that the backed up loads remain energized regardless of the grid quality and presence.

- Supports backup power ✓
- Supports faulting equipment ✗

Unstable Equipment - Bypass

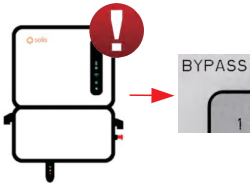

For systems that have problematic equipment resulting in shutdowns, the Bypass (1) setting should be used. When set to Bypass (1), the inverter will pass power through to the backed up loads from the grid directly even if it cannot produce power itself with PV and battery.

- Supports backup power ✗
- Supports faulting equipment ✓

Pass-Through Power

The 3.8-5kW models can pass through 7.6kW maximum from the grid to the loads. The 7.6-11.4kW models can pass through 11.4kW maximum. **Do not set the bypass switch to bypass position if an overload fault occurs or if the system breaker trips.**

IMPORTANT:
The bypass switch should be used to protect the home loads from grid and equipment failures. The bypass switch is not an AC disconnect switch.

5. Installation

5.11 Inverter Communication

5.11.1 Communication Terminals Overview

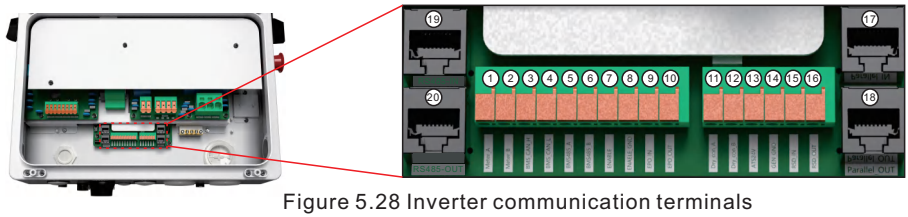

Figure 5.28 Inverter communication terminals

The inverter communication terminal block consists of 16 ports.
From left to right, the table below explains what purpose of each port is.

NO.	Port	Function	Acceptable Wire Size Range
1	Meter_A	Used for RS485 communication between the inverter and the external energy meter. This is required in order to have full functionality of the hybrid inverter.	22-16 AWG
2	Meter_B		
3	BMS_CAN_H	Used for CAN communication between the inverter and a compatible battery.	
4	BMS_CAN_L		
5	BMS485_A	Used for RS485 communication with compatible batteries that use it and not CAN.	
6	BMS485_B		
7	ENABLE		
8	Enable_GND		
9	EPO_IN	Emergency Power Off signal.	
10	EPO_OUT		
11	Dry con_A	Dry contact for generator connection.	
12	Dry con_B		
13	ATS24V	For Supplementary ATS connection.	
14	GEN GND		
15	RSD_IN	For each side of the external rapid shutdown initiation switch. (optional)	
16	RSD_OUT		
17	Parallel_IN	For parallel S6 hybrid daisy-chaining.	RJ45
18	Parallel_OUT		
19	RS485-IN	Not relevant for the US model	
20	RS485-OUT		

Figure 5.29 Inverter communication terminals explained

NOTE:
COM1 and COM2 conduit knockouts are for ½ inch cable glands or conduit fittings. Please be sure to not run com cables in the same conduit as high voltage conductors. Doing this could cause communication issues.

5. Installation

Installing the communication wires:

First, strip ¼ inch off the end of the com wire.

1. Insert a technician screwdriver into the slot the orange tab and gently pull up with it.

2. Insert the stripped com wire into the terminal.

3. Remove the screwdriver and the terminal will clamp down on the wire.

4. Finally, give the cable a gentle tug to ensure that it is firmly secured. If it is not, repeat steps 2-5 but push the wire deeper into the terminal before releasing.

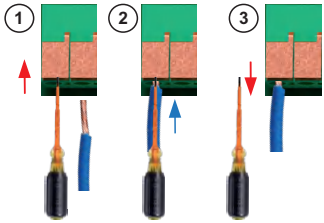

5.11.2 External Energy Meter Communication

The inverter comes with an energy meter that gets installed externally. The wiring diagram in Figure 5.25 shows how to properly install the meter in the system.

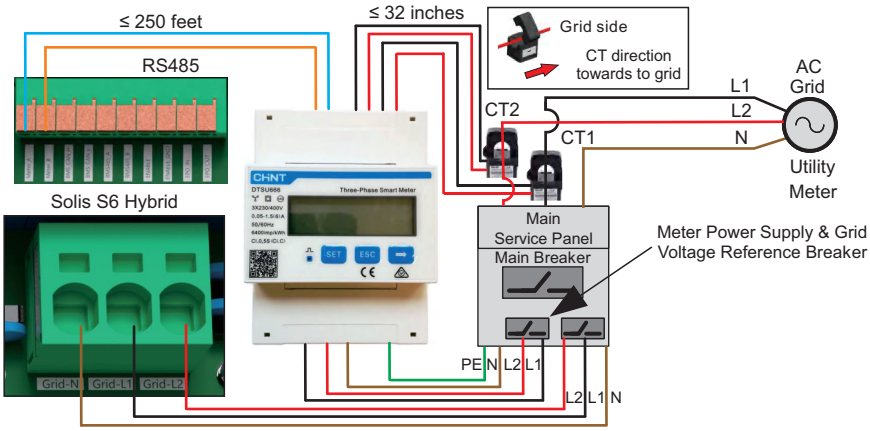

Figure 5.30 CHINT Meter Wiring Diagram (CHINT DTSU666)

The meter must be installed in order to have a fully-functioning system. If the meter is not installed, key functions such as export power control and default energy storage modes will not be available. It is possible for the system to function without the meter, but the capabilities will be limited. After installing the meter, in order to ensure correct wiring, please use a multimeter to measure the voltage of grid L1 and meter L1. The voltage should be between 0-5V, and L2 should be the same. If it is not, please check switch L1 and L2 at the meter so that the phases are matched up.

IMPORTANT:

The phases must match for the system to operate normally and without issues. The L1 and L2 inputs of the meter must align with the L1 and L2 inputs of the inverer grid-side connection. The L1 and L2 CTs must be installed on the same phases, everything must match up.

5.11.3 Battery Communication

CAN Communication

Connect a CAT5 cable to the battery CAN port and run the cable to the inverter. Split the cable at the inverter end. Consult the compatible battery communication pin chart on the next page. Some batteries have an RJ45 ethernet cable port and some have terminals. If the battery has terminals, then any color wires can be used so long as the same colors are used on both ends for CAN-H and CAN-L. If the battery has an RJ45 port, then use the chart on the following page to select the correct color wires. If multiple battery stacks are being connected to a single inverter, please carefully read the battery manual to understand the proper method for connecting the communication cables together before going to the inverter.

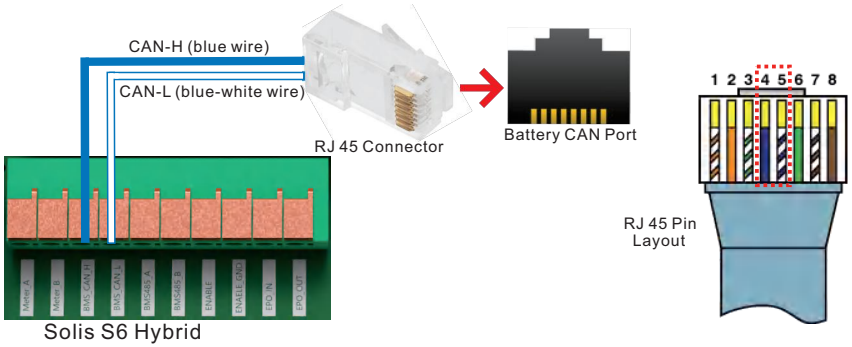

Figure 5.31 Battery CAN Communication Example

RS485 Communication (for LG only)

Run a CAT5 cable between the battery and the inverter. Split the cable at both ends and then use the diagram in Figure 5.26 to connect the four wires on both the battery and inverter ends. LG is the only battery that uses RS485, all the others must use CAN.

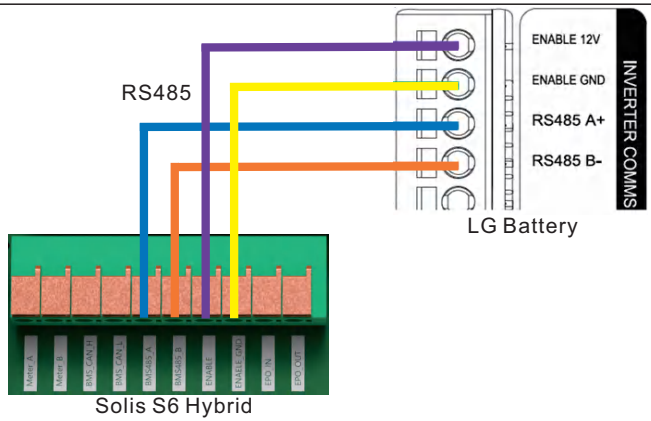

Figure 5.32 Battery RS 485 Communication (LG only)

5.11.4 Battery Communication Wiring Table

The chart below shows which color wires to use for CAN-H and CAN-L for each of the compatible batteries. If it says “Any” that means there are terminals on the battery end so any colors can be used just as long as they match on both ends. For batteries that have an RJ45 ethernet port for CAN connection the chart below explains which colors to use for the inverter CAN-H and CAN-L terminals. The colors are based on a standard ethernet patch cable, not a crossover cable.

Battery Model	CAN-L	CAN-H	RS485
LG RESU Prime	N/A	N/A	Any
LG Enblock Series S	N/A	N/A	Any
Pylontech Force H1	Blue-White	Blue	N/A
Pylontech Force H3	Blue-White	Blue	N/A
Fortress Avalon HV	Any	Any	N/A
Soluna 15K Pack HV	Blue-White	Blue	N/A
HomeGrid HV Stack’D	Brown-White	Brown	N/A
Dyness Tower	Blue-White	Blue	N/A
BYD HVL	Any	Any	N/A
Pytes HV 48100	Blue-White	Blue	N/A
Goldenmate Apollo HV	Blue-White	Blue	N/A
EndurEnergy ESP-5K-L	Blue-White	Blue	N/A

Standard Ethernet Patch Cable

Figure 5.33 Battery Communication Wire Color Chart

IMPORTANT:
Solis cannot guarantee normal operation with any battery that is not on the list shown in the table above. Please only install batteries from this list.

Battery Manual and Battery Firmware
Please be sure to read through the battery manual for proper installation steps.The battery manual should be provided with the battery or it can be downloaded from the battery manufacturers website directly. It is very important to update the firmware of the battery during the installation and commissioning of the system. Failing to update both the inverter and battery firmware can lead to communication issues and the alarm codes CAN_Comm_Fail & No-Battery.

NOTE:
Some alarm codes are being relayed from the battery. These alarms are caused by an issue with the battery itself. The troubleshooting section of this manual explains how to diagnose and treat each alarm. If the alarm says the battery is having a malfunction, please contact the battery manufacturer.

5.11.5 Parallel Inverter Communication

There are two RJ45 ports reserved for communication between Solis S6 hybrids only. The communication is CAN and is the ports are not able to be used for any other purpose besides daisy-chaining multiple Solis S6 hybrids together.

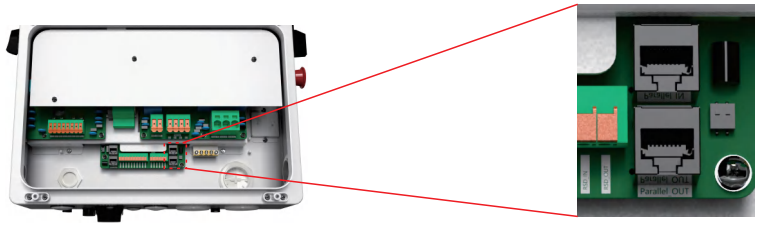

Figure 5.34 Inverter DIP switch settings

Steps for connecting daisy-chaining inverters together:

Use a double-ended CAT5 ethernet cable. One should be included with the inverter.

1. Plug one end of the cable into the Parallel_IN port of the master inverter
2. Plug the other end of the cable into the Parallel_OUT port of the slave inverter
3. Set the DIP switches for the master and last slave in the chain to ON (up position)
4. Set the DIP switches for all other slave inverters in between to OFF (down position)

Note: If there are only two inverters, then all DIP switches must be set to ON.

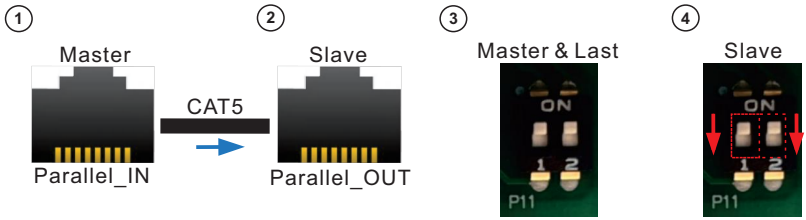

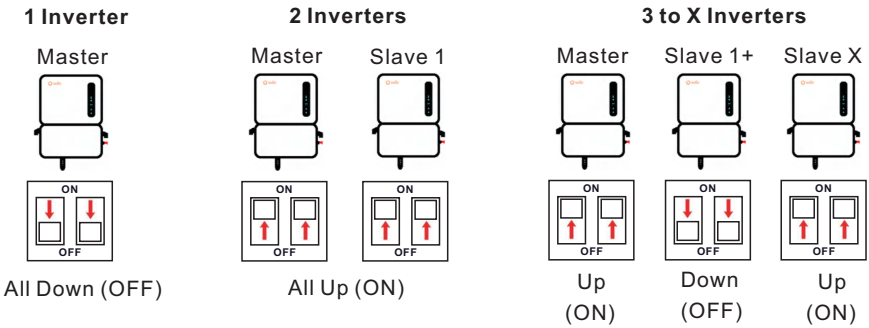

Figure 5.35 Inverter DIP switch settings

NOTE:
The bypass switches for each inverter in the parallel system must be consistent, otherwise it may cause system malfunctions.

NOTE:
The master inverter will manage the output power of the slave inverter. If the master inverter has a fault, the slave inverter will continue to operate unless the fault is critical. If the fault is critical, all inverters will stop operating.

5.11.6 Paralleling Rules

In order to ensure normal operation and the safety of the equipment, the following rules must be followed when paralleling multiple inverters on the backup-side.

1. When connecting inverters in parallel, it is mandatory to match their sizes. For example, pair an 11.4KW inverter with another 11.4KW inverter. Do not parallel inverters of different sizes on the backup-side.
2. Before parallel connection, verify that both inverters are operating on the same firmware version. The inverters must never be on different versions of firmware.
3. Up to three hybrid inverters can be installed together in parallel, no more than that.
4. The energy meter and the data logger only need to be connected to the master. But to update the firmware, each inverter needs to have its own data logger connected to it.
5. All inverters in the system must be connected to the same ground point to eliminate the possibility of a voltage potential existing between inverter grounds.
6. Each inverter must have its own PV strings connected to it, as per the DC input PV specifications of the inverter. It is ok to have some inverters with only battery and no PV.
7. Each inverter must have the same brand, model, and size (kWh) battery connected to it The inverters cannot have different batteries or sizes (kWh).
8. The inverter backup circuit breakers must be connected in a separate isolated load center that is not electrically connected to the grid.
9. The AC bypass switches for all inverters must all be in the same position always.
10. The parallel settings for each inverter must be configured prior to initiating operation.
11. Prior to initiating full system operation it is essential to verify that each inverter operates normally. Set each inverter one-by-one for single operation, ensure there are no alarms during operation, shut it down, and then go to the next inverter.

Note: These rules apply only to paralleling the backup ports of the inverters together. If the inverters are being paralleled on the grid-side only then these rules can be ignored.

Scan the QR code to see a video for parallel installation guidance

5.11.7 Paralleling Wire Diagram

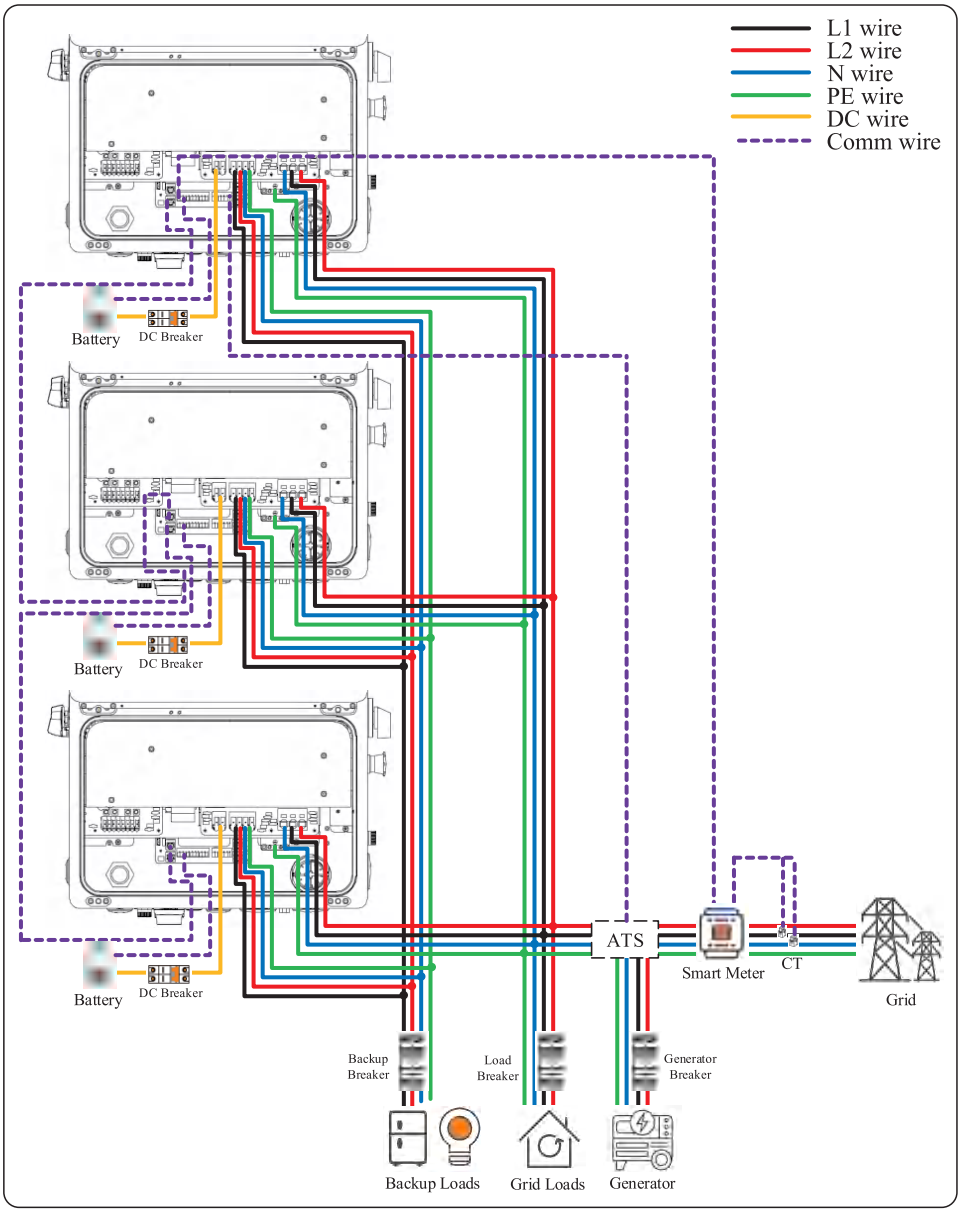

5.11.8 Emergency Power Off (EPO)

An external emergency power off switch can be added to the system. There are two pins on the communication terminal block designated for such a switch.When this switch is engaged, the inverter will cease operating. This means that the voltages will be unaffected, but the currents (A) on all conductors will become zero. After installing an external switch, run a 2-core cable between it and the inverter. Connect the two cores from the switch to the EPO_IN and EPO_OUT ports of the inverter. Initiating EPO for the master will also initiate EPO for the slaves.

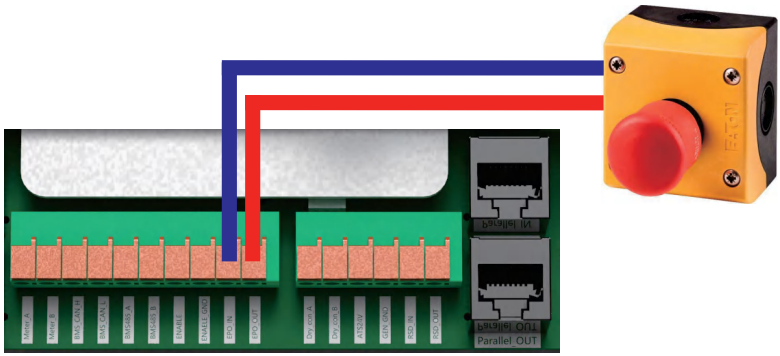

Figure 5.36 External emergency power off switch

5.11.9 Inverter Bluetooth Network

The Solis S6 hybrid generates a Bluetooth network which allows technicians to directly interface with the inverter using a smart phone or tablet. The accessory kit will include a Bluetooth antenna. Remove the black protective cap from the “Antenna” port on the bottom of the inverter. Attach the Bluetooth antenna to the port by rotating it *counter-clockwise* until it feels tight. Please note, the antenna simply extends the range of the inverter Bluetooth network from 3 feet to about 10 feet, but it is not required for the Bluetooth network to function normally. Please be sure to tighten the antenna until it feels snug.

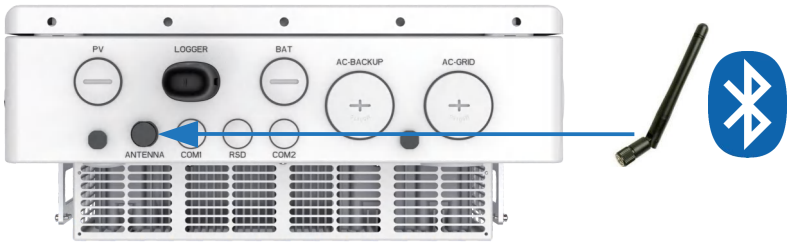

Figure 5.37 Bluetooth antenna port location

5.11.10 Generator Communication

Off-Grid

For purely off-grid systems, a generator can be used as a grid replacement. The inverter uses dry contact to turn the generator on when the battery SOC discharges to a specified limit. Generator power is used to charge the batteries and feed the home loads when the PV power is insufficient. The generator is turned off once the battery SOC reaches another specified limit.

Connect the generator dry contact to pins **Dry_con_A** and **Dry_con_B** of the inverter.

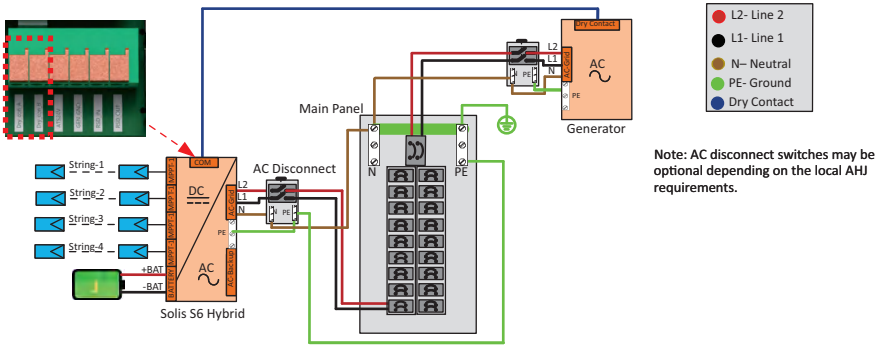

Figure 5.38 Off-Grid Generator Wiring Diagram

On-Grid

The generator must be connected to the grid-side of the inverter and there must be an external ATS used to switch from grid to generator. Connect the ATS24V pin of the inverter to the ATS. The ATS will signal the inverter when it switches from grid to generator. The inverter will curtail the PV power to zero as to not backfeed the generator, which could damage it. The battery can be charged with generator power. Once the grid is back and the ATS switches from generator to grid, the inverter will begin producing PV power once again. Dry contact can also be used if it is preferable to have the inverter turn the generator on/off instead of the ATS, based on the battery SOC. However, the generator must be connected to the grid-side of the inverter.

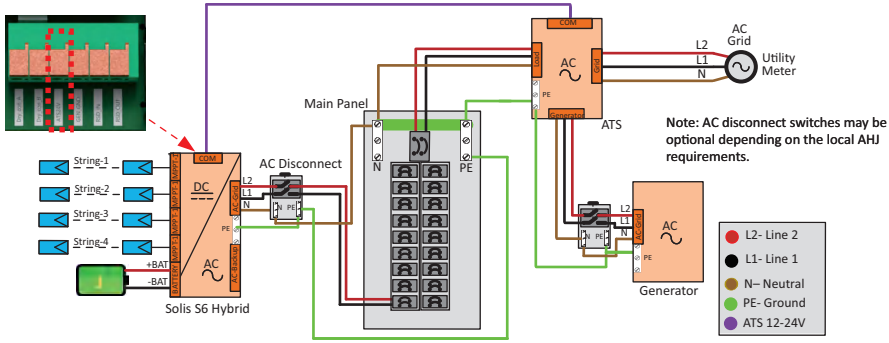

Figure 5.39 On-Grid Generator with ATS Wiring Diagram

IMPORTANT:

The inverter currently does not support direct connection with RS485.

6. Commissioning

6.1 Pre-Commissioning Steps

- Visually inspect each piece of equipment in the system closely.
- Check all conduit and cable connection points to ensure they are tight.
- Verify that all system components have adequate space for ventilation.
- Follow each cable to ensure that they are all terminated in the proper places.
- Ensure that all warning signs and labels are affixed on the system equipment.
- Verify that the inverter is secured to the wall and is not loose or wobbly.
- Prepare a multimeter that can do both AC and DC amps
- Have an Android or Apple mobile phone with Bluetooth capability
- Install the Soliscloud app on the mobile phone if you do not have it already
  There are three ways to download and install the latest app:
  1. You can visit **www.soliscloud.com**
  2. You can search "**Soliscloud**" in Google Play or App Store.
  3. You can scan this QR code to download **Soliscloud**.
- Register a new account with SolisCloud if you have not done so already. There are two account types available:

  Organization: for installers, technicians, and any third-party that is not the direct owner of the home where the system is installed. This is for fleet management. Organization accounts are able to remotely control systems through SolisCloud.

  Owner: for homeowners who typically only have a small number of sites and are only looking to monitor their system(s).

6.2 Commissioning Procedure

Once the equipment has been fully installed and an account for SolisCloud has been registered, the commissioning process can begin. This manual will explain steps 1 through 6. For steps 7 and 8, please see the manual for the Solis cellular data logger. The steps are the same for the other types of Solis data loggers.

Step 1: Verify the DC and AC voltages

Step 2: Connect to the inverter with the SolisCloud app

Step 3: Update the inverter firmware

Step 4: Configure the initial settings: time, battery, meter, grid standard, work mode

Step 5: Configure optional settings: export power, AC-coupling, parallel, generator

Step 6: Turn the inverter on

Step 7: Connect a Solis logger

Step 8: Create a plant on SolisCloud

Scan for the Solis cellular data logger manual

6. Commissioning

Step 1: Verify the AC and DC voltages

Use a multimeter to measure the PV string voltages in free air. Then land them, turn on the grid-side AC breaker, keep the DC switch turned off, then measure the voltages again. Verify that the polarities are correct. Also check the AC voltages from the grid and the battery DC voltage/polarity.

Step 2: Connect to the inverter with the SolisCloud application

Turn your phone Bluetooth on and then open the SolisCloud app. Tap *Service,* then tap *Local Operation*, and then tap *Connect with Bluetooth*.

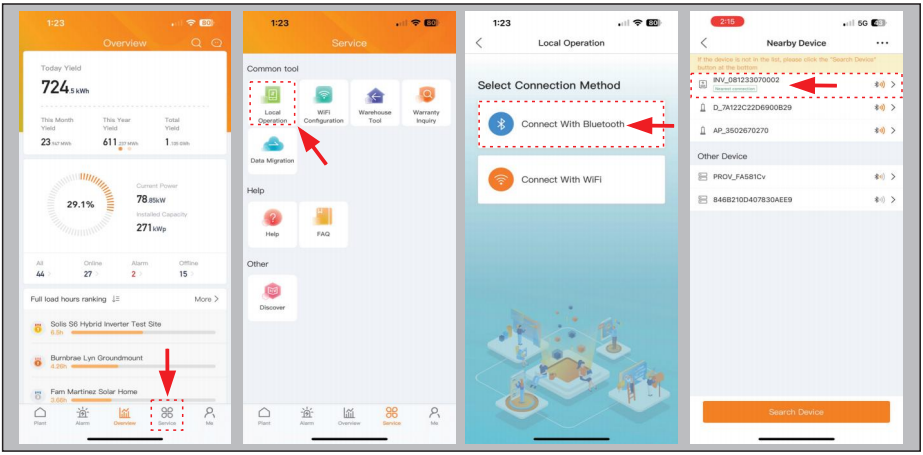

The name of the inverter Bluetooth network will display as “INV_” and then the inverter serial number. Tap on inverter to connect to it. The next screen will prompt you to create a six-character password. The password must be exactly six characters. Once you set the password, tap *Set Password*. It is highly recommended to save this password somewhere in case anyone ever returns to the site in the future. You should then see the message “Connection succeeded’ and then you will be at the main interface page.

Step 3: Upgrade the inverter firmware

Tap on *Setting* in the bottom right corner, then tap *Device Upgrade* at the bottom.

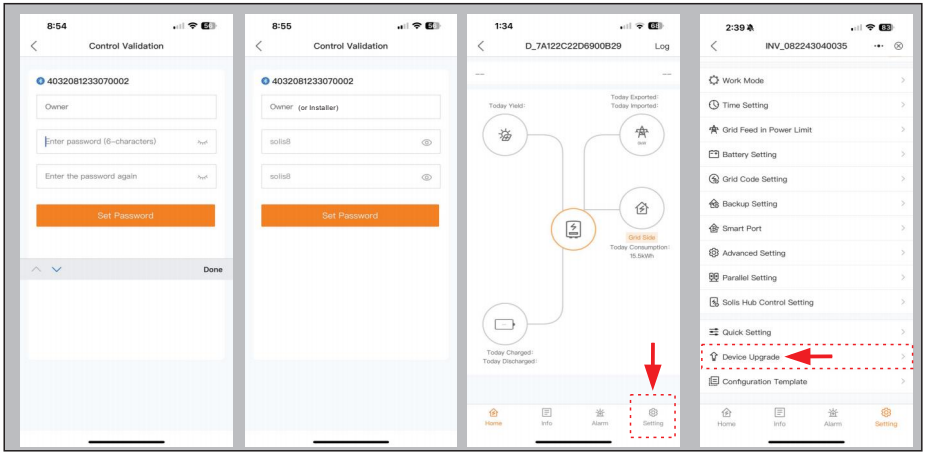

6. Commissioning

Set the AC bypass switch to the bypass position. Tap *Check the update* for HMI. A message will either prompt you to download and upgrade the new firmware version or it will inform you that the firmware is on the most current version. Wait for the firmware to finish downloading and then initiate the upgrade. Leave the SolisCloud app open until the update is complete. It could take between 10 &20 minutes to upgrade. Repeat the process for the DSP firmware. The total upgrade time can take up to 45 minutes.

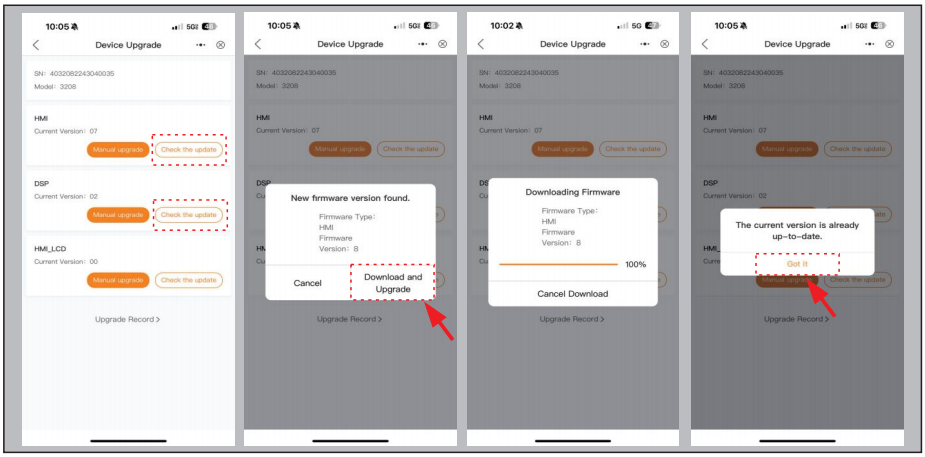

Step 4: Configure the Quick Settings

After the firmware has been upgraded, tap *Quick Setting* in the bottom right corner of the main Setting menu. Tap the toggle switch for *Follow Phone Time* to match the inverter time to your phone time or manually set the time yourself, then tap Next Step. Select the battery that is installed, and if no battery is installed, then tap *No Battery*Tap Next step, and then verify that *Acrel 1P Meter* is selected. If a meter is not installed, tap *NO Meter* and then tap Next Step.

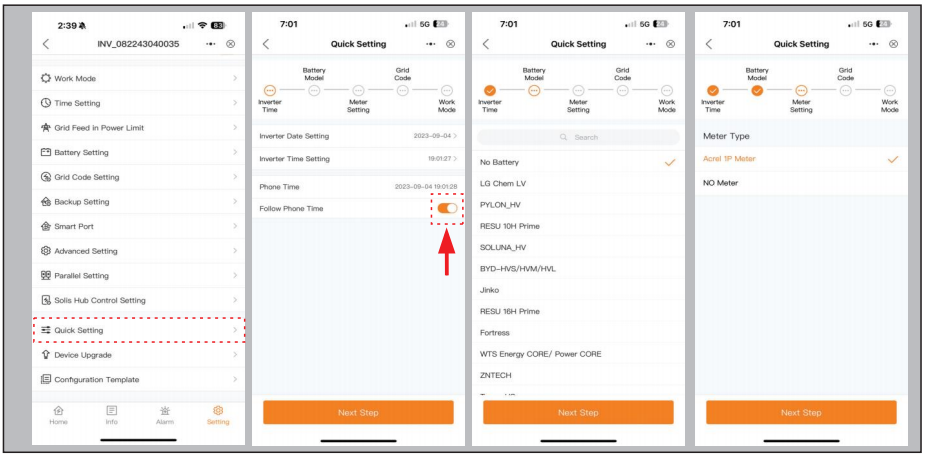

6. Commissioning

The inverter Grid Code is the grid interconnection profile by which the inverter will operate when it is connected to the grid. For systems installed in the United States, the base (default) profile is **UL-240V-18**. This grid profile is based on the IEEE 1547-2018 standard and is compliant with UL 1741 SA/SB.Tap the standard at the top first to bring up the list of regions. Scroll to the bottom and then tap *USA*. Then select the standard you would like. You can then alter the trip point parameters by tapping the parameter, entering the desired value, and then tapping Save when you are done.

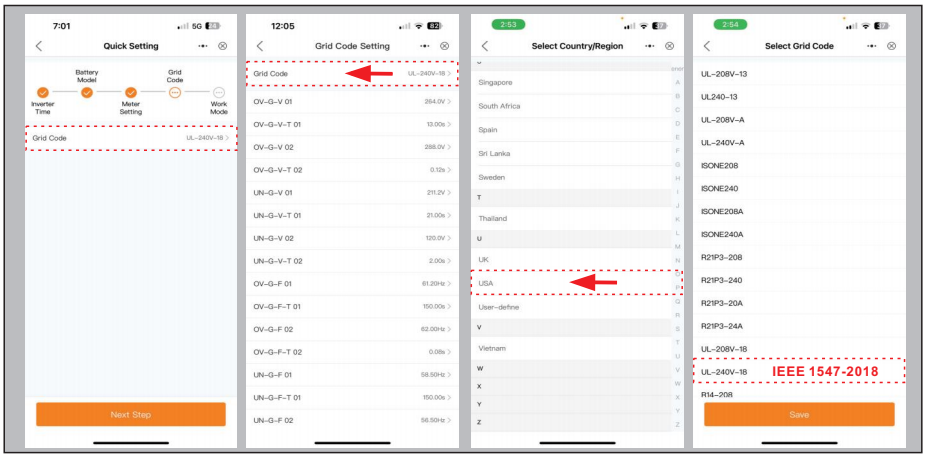

The *Work Mode* is the energy storage operating mode of the inverter. Please see the logic tables on pages 18 through 19 for explanations on how the modes operate to determine which one you should select for each system. Upon selecting the mode, you will need to toggle the on switch for that mode. If you want to maintain a store of energy that can only be used in the event of an outage, toggle on the *Battery Reserve switch* and then set the *Reserve SOC* to the desired limit. When on-grid, the battery will not discharge below this limit.

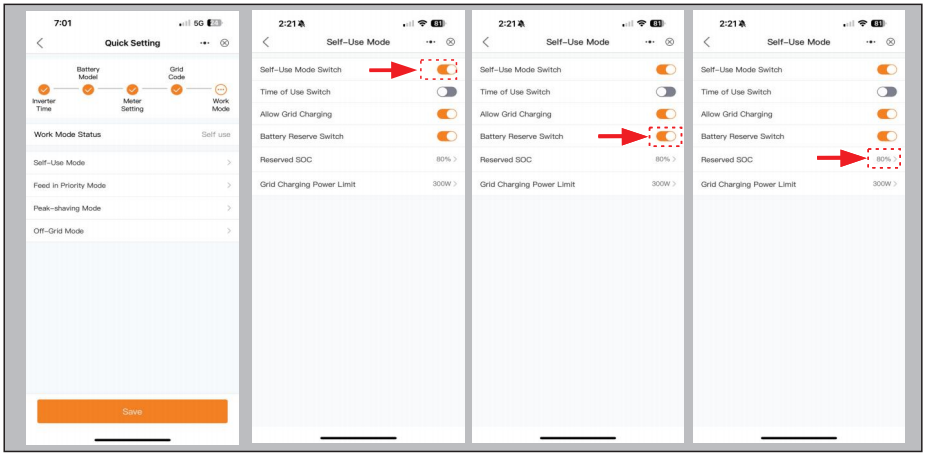

6. Commissioning

Off-Grid mode should only be enabled for systems that are perpetually isolated from the grid such as a cabin in the woods. It should not be confused with on-grid backup mode.

Time of Use Settings

This function allows you to customize when the battery can charge/discharge power and at what power rate, established by a DC current (A) setting. If the slider switch is on, the inverter will only use this schedule to determine when to charge and discharge the battery. Set the *Charge Time Slot* and *Discharge Time Slot*, be sure there is no overlap between them. Tap + *Add Time* and then set the start and end times. During the time outside of the set windows and if the Time-of-Use toggle switch is off, the inverter will exercise the default logic for the mode, see pages 18 to 19. If *Allow Grid Charging* is turned on, the inverter will use grid power to charge the battery only under two circumstances: (1) the battery discharges to the *Force Charge SOC* set in the *Battery Settings* and (2) Time of Use is enabled and there is not enough available PV power during the charge window to meet the current rate that is established.

NOTE:

Allow Grid Charging should be enabled for every system. The inverter will float charge the battery when there is not enough PV power available. This ensures the battery never drains past the point-of-no-return where it cannot be charged by the inverter.

NOTE:

The set current value is the maximum current for charging/discharging the battery. However, the actual charging and discharging current may not reach this value due to the influence of other factors, such as the maximum charging/discharging power limitation of the inverter, the battery BMS limitation, etc.

The *Peak-shaving Mode* has additional settings for *Max. useable Grid Power* and *Peak SOC*. Max. useable Grid Power is the most amount of power that the inverter can import from the grid to cover load demand. The *Baseline SOC* is the target state-of-charge percentage that the system will try to reach by the time the peak window starts. The system will import power to cover load demand in excess of PV power generation outside of the established peak window. When selecting *Peak Shaving Mode,* you must enable and configure the *Time of Use* settings for the mode to work properly. You must also toggle on the *Peak-Shaving Setting* in the Battery Setting.

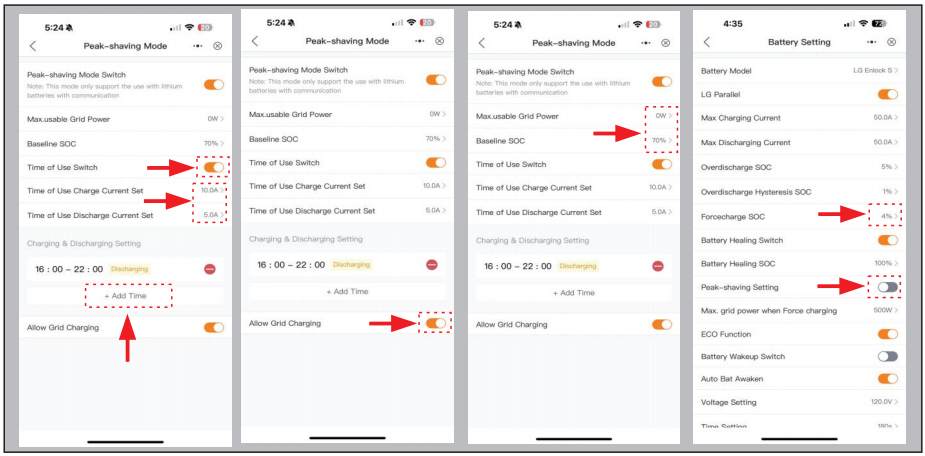

6. Commissioning

Step 5: Configure the optional settings

To enable the backup power function, first go to *Backup Setting*. Toggle on the *Backup Port Enabling Setting* switch. Keep this setting turned off if there is not going to be any backup power for this system.

AC Coupling Settings

If there is an existing PV system being AC-coupled to the backup-side of the system, the AC Coupling settings will need to be configured. Tap *AC Coupling* in the main Setting menu. Toggle on the *AC Coupling Switch*. Leave the position set to *Backup Port*.
The *AC Coupling_OFF_SOC* is the battery state-of-charge % at which the Solis S6 will shut off the existing PV system using AC frequency-shifting. The *AC-coupling Max.frequency* can be set as well as. Having this setting configured ensures that when in backup mode, the ACPV does not damage any equipment.

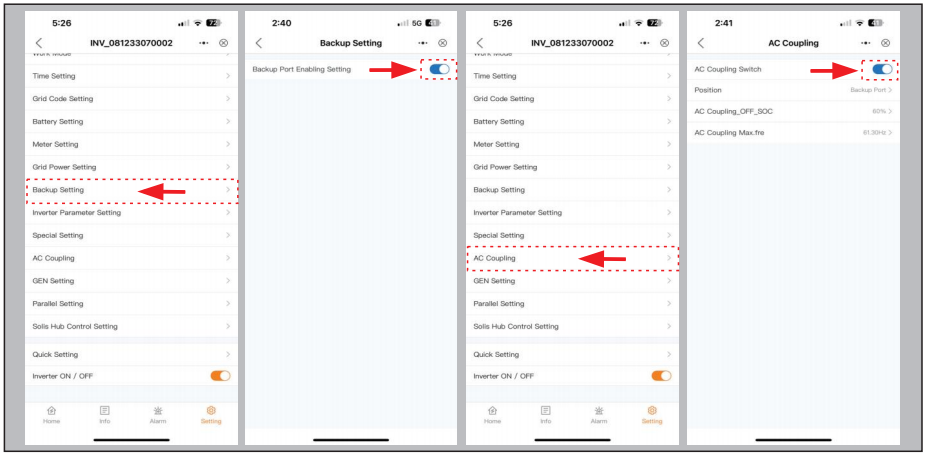

Backup Switching Time

The backup switching time will be about 80ms when using the IEEE1547-2018 grid standard. This is specifically due to a conflict with the low voltage ride-through (LVRT) requirements. If faster backup switching time (10ms) is more important than the LVRT requirements, enable the IG Follow setting. Go to Advanced Setting, then to Special Function Setting. Toggle on the IG Follow switch on for seamless transitioning to backup mode.

NOTE:
If both phase imbalance and export power control settings are enabled, and it is found that one phase is exporting power while the other is importing power, it indicates there is a meter wiring error. Please check the meter wiring. If the power direction at the power grid port is opposite to the actual logic, please check if the CT direction is correct.

NOTE:
If the password is forgotten, it can be reset by pressing and holding the Inverter LED down for ten seconds.

6. Commissioning

Paralleling Steps

Tap *Parallel Setting* and then tap *Parallel Mode*. Change this from *Single* to *Parallel,* then tap Save. Next, change the *Physical Address ID* of the slave inverter(s) to 2, 3,.. etc. but leave the address of the master inverter set to 1.

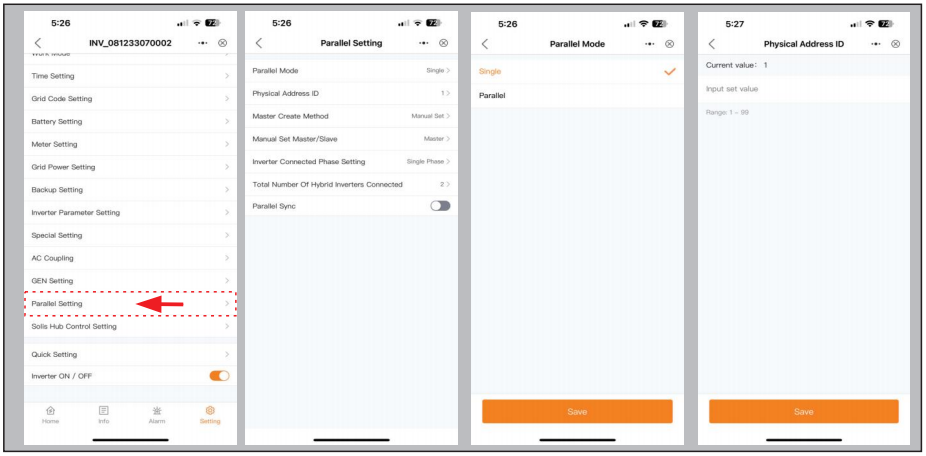

Manual Set/Master Slave allows you to manually determine which slave inverter becomes the master in the event that the original master has a fault. If three inverters are being connected in a high-leg delta configuration, the Inverter Connected Phase Setting will allow each inverter to be set as a phase. The *Total Number of Hybrid inverters Connected* should be set to reflect the number of Solis S6 hybrids installed in the system. The *Parallel Sync* toggle switch will match the settings of the master and slave(s) inverters. The inverters must each have the exact same brand, model, and kWh capacity battery connected to them. The bypass switches must all be in the same position as well.

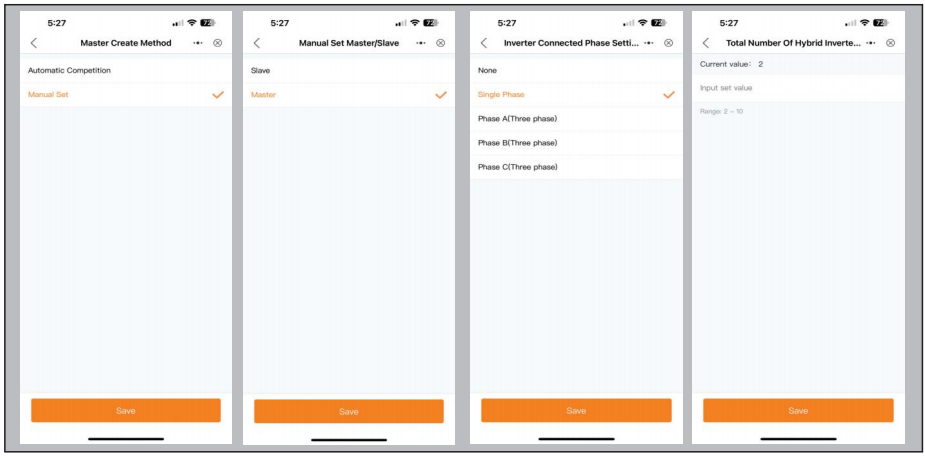

6. Commissioning

NOTE:
When the system is operating in parallel, then working modes and other Settings can be synchronously set through the Master, rather than setting them separately for each slave inverters. Also, the grid and load data of the master are considered as parallel system data.

Export Power Settings

In the main Settings menu, tap Grid Power Setting. If you would like to regulate export power, toggle on the *Feed in Power Limit Switch*. Leaving this setting off will result in the system exporting as much as it can depending on which work mode has been set.

After toggling the switch to on, set the *Feed in Power Limit Value* (kWh) to the maximum amount of power that the system is to be permitted to export (sell) back to the utility.

Alternatively, the *Feed in Current Limit Value* (A) can be set as the limiting value for power being exported. If values are entered into both the Feed in Current Limit Value and the Feed in Power Limit Value, the system will enforce the lower of the two values

Turning on the *Split-Phase On-Grid Unbalance Switch* allows the system to support up to 100% phase-imbalance. It is recommended to toggle this mode on if there are heavy 120V loads such as air conditioners, heaters, pumps that all plug into a standard outlet.

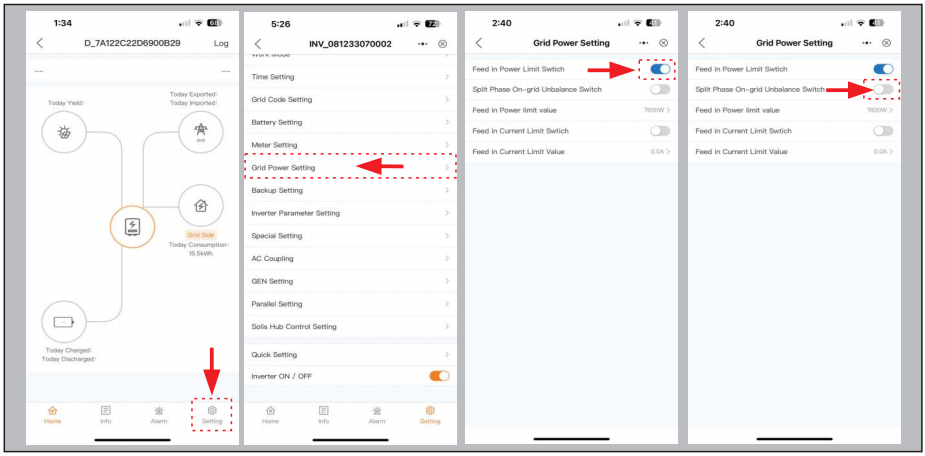

NOTE:
If it is not possible to install the meter for whatever reason, please keep the Feed in Power Limit Switch set to the off position.

NOTE:
Export power shows as a positive value and import power shows negative.

6. Commissioning

Battery Settings

Max. grid power when Force charging determines how much power the battery will be float-charged with if the battery SOC reaches the *Force Charge SOC*. The *Auto Bat Awaken* switch should be enabled to ensure the inverter will automatically turn on the inverter after a system hard reset. The *Voltage Setting* and *Time Setting* do not need to be adjusted.

Meter Settings

Tap the *Advanced Setting* menu. The *Meter Type* can be changed if a meter is being added or removed. If the consumption data is being read inversely, the *CT Direction* can be flipped from forward to backward so that the data displays normally.

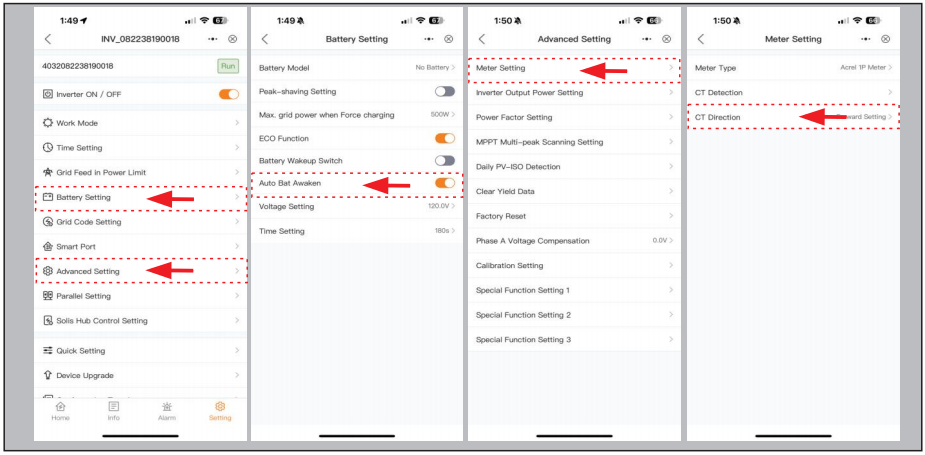

Generator Settings

If a generator is being installed , toggle on *Generator Charge*. If the system will be fully off-grid where a generator is used in place of grid power, tap *Grid Port Powered By* and then change Grid to Generator. You can set the amount of power that the system will use from the generator to charge the battery by adjusting the *Gen Charge Power*. The *Start Charging SOC* determines the point at which the generator will be turned on to charge the battery and feed the home loads. When this occurs, the PV power will become zero as to not back feed the generator. The *Stop Charging SOC* will set the point at which the generator will be turned off so that the system will return to PV and battery only. These SOC values can be adjusted.

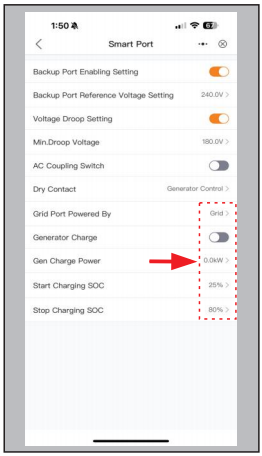

The inverter uses the dry contact connection to start and stop the generator. If the external third-party ATS has a 12-24VDC signal input then it can also be connected to the inverter ATS24V pin (+) along with the GEN_GND pin (-).

6. Commissioning

Now that the settings are done, turn on the inverter DC switch. The system will begin to generate PV power after about five minutes. The main screen provides an overview of the system behavior. It can quickly be determined if the battery is properly communicating or not and what the SOC is. The image below explains what each icon represents. At the bottom of the page are four submenus: Home, Info, Settings, and More. The Info page breaks down into four categories: Inverter, Battery, Grid, and Load.

Inverter: inverter power production history, PV voltages and currents, inverter info (serial number, model number, and firmware version), grid code, and alarm code history
Battery: battery model and status, battery voltage and current
Grid: power imported and exported, AC grid voltage, frequency, and amperage
Load: power being consumed by the home loads and backup loads

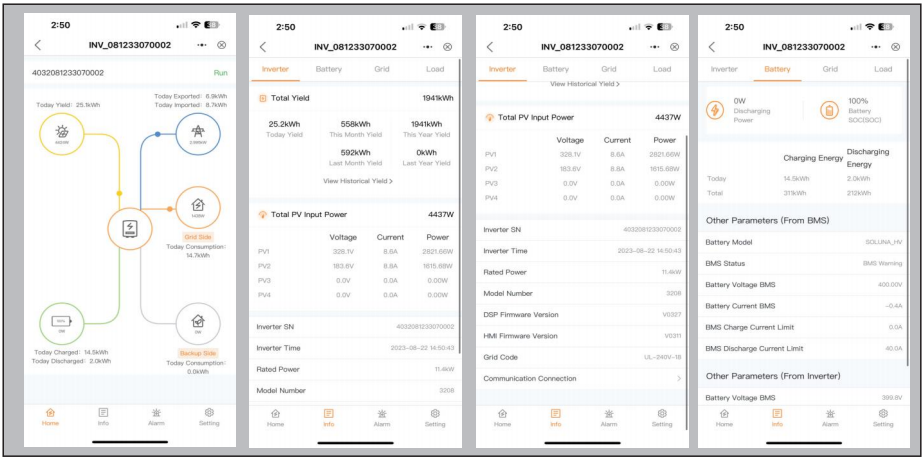

Alarm History

It is recommended to check the alarm history as the final step of the commissioning process, excluding creating a site on SolisCloud for the system. Tap *Alarm* and then tap *Historical Alarm* to view the full alarm history. Each alarm will have a date and time stamp as well as a suggestion on how to handle the alarm. The next section goes over troubleshooting and you can always contact Solis USA technical support with any questions or concerns.

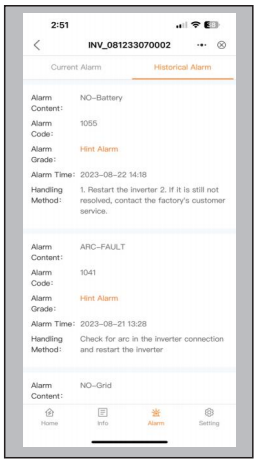

Steps 7 & 8: Finishing the Commissioning Process

The inverter commissioning process has now been completed. It is recommended to monitor the system closely over the next week to ensure that everything is working as it should. Please refer to the Solis data logger manual for assistance with registering a new plant on SolisCloud. Scan the QR code at the bottom of page 60 for the Solis data logger manual.

7. Troubleshooting

Solis US Technical Support Contact Information

Phone Number: **+1(866)438-8408**
Email: **usservice@solisinverters.com**

If you are having an issue with your system, please contact Solis Technical Support for assistance. If the inverter is having an issue, it will show it in one of the following ways: (1) the Inverter (circle) LED indicator light will flash orange. (2) the inverter status will be an alarm code (3) an alarm code will display on SolisCloud or (4) the inverter will simply be off. The next several pages explain how to troubleshoot each alarm code. If it is suspected that the issue is coming from the DC side of the system, it is recommended to turn the inverter off so that the PV strings can be more safely tested.

7.1 Inverter Shutdown Procedure

Step 1. Turn off the AC disconnect switch to disable AC power to the inverter
Step 2. Push in the RSD Initiation Switch and then turn off the DC switch of the inverter
Step 3. Turn off the battery breaker on the battery BMS
Step 4. Use a multimeter to verify that the battery and AC voltages are 0V. If RSD is being used, the PV string voltages should be at safety levels

7.2 Inverter Maintenance

Solis S6 hybrid inverter does not require any regular maintenance. However, keeping the heatsink clean will ensure the inverter is able to dissipate heat, increasing the life span of the inverter. Any grease smudges on the inverter chassis can be cleaned off with soap and water.

CAUTION:
Do not touch the surface of the inverter it is operating. Some parts may be hot and could cause a minor burn. Turn off the inverter (refer to Section 6.2) and let it cool down before you do any maintenance or cleaning of it.

The LED status indicator lights can be cleaned with damp cloth if they are too dirtyto be read.

Note:
Never use any solvents, abrasives, or corrosive materials to clean the inverter.

The inverter has been designed in accordance with international standards for safety and electromagnetic compatibility requirements. Before being shipped from the manufacturing center, the inverter is subjected to multiple tests to ensure operation reliability.

If you are not able to resolve the alarm code using the troubleshooting steps, or if the alarm code you are seeing is not listed, please contact Solis US Technical support. Use the Bluetooth tool, go to the Info page and then to the Inverter tab. Scroll down and tap Alarm History and then screen shot or write down the alarms as well as the dates and times the alarms were recorded. Please also take note of the inverter model number, serial number, and internal transmitter type.

7. Troubleshooting

7.3 Inverter Alarm Codes

Alarm Message	Failure description	Solution
ARC-FAULT	ARC detected in DC circuit	1. Check if there is an arc in the PV connection and restart inverter.
AFCI Check FAULT	AFCI module self check fault	1. Restart inverter or contact installer.
DCinj-FAULT	High DC injection current	1. Restart inverter or contact installer.
DSP-B-FAULT	Comm. failure between main and slave DSP	1. Restart inverter or contact installer.
DC-INTF	DC input overcurrent	1. Restart inverter. 2. Identify and remove the string related to the faulty MPPT. 3. Change power board.
G-IMP	High grid impedance	1. User design function allows the protection limit to be adjusted if it is allowed by electrical company.
GRID-INTF01/02	Grid interference	1. Restart inverter. 2. Change power board.
IGBT-OV-I	Over IGBT current	
IGFOL-F	Grid current tracking fail	1. Restart inverter or contact installer.
IG-AD	Grid current sampling fail	
ILeak-PRO 01/02/03/04	leakage current protection	1. Check AC and DC connection. 2. Check inverter inside cable connection.
INI-FAULT	Initialization system fault	1. Restart inverter or contact installer.
LCD show initializing all the time	Can not start-up	1. Check if the connectors on the main board or power board are secure. 2. Check if the DSP connection to the power board is secure.
NO-Battery	Unconnected battery	1. Ensure the battery is connected properly. 2. Verify the output battery voltage is correct.
No power	Inverter no power on LCD	1. Check PV input connections. 2. Check DC input voltage (single phase >120V, three phase >350V). 3. Check if PV+/− is reversed.
NO-GRID	No grid voltage	1. Check connections and grid switch. 2. Verify the grid voltage is correct on the AC Terminals inside the inverter wiring box.
OV-BUS	Over DC bus voltage	1. Check inverter inductor connection. 2. Check driver connection.

7. Troubleshooting

Alarm Message	Failure description	Solution
OV-DC01/02/03/04	Over DC voltage	1. Reduce the module number in series.
OV-DCA-I	DC input overcurrent	1. Restart inverter. 2. Identify and remove the string of the faulted MPPT. 3. Change power board.
OV-G-V01/02/03 /04/05	Over grid voltage	1. Resistance of AC Cable is too high. Increase the gauge of grid cables. 2. Adjust the protection limit if it is permitted by electrical company.
OV-G-I	Over grid current	1. Restart inverter. 2. Change power board.
OV-G-F01/02	Over grid frequency	1. User design function allows the protection limit to be adjusted if it is permitted by electrical company.
OV-IgTr	AC side transient overcurrent	1. Restart inverter. 2. Return-factory repair.
OV-ILLC	LLC hardware overcurrent	
OV-VBackup	Backup overvoltage fault	
OV-TEM	Over Temperature	1. Check inverter surrounding ventilation. 2. Determine if there is direct sunlight on the inverter during hot weather.
OV-Vbatt1	The detection of battery overvoltage	1. Verify the protection point for over voltage is set correctly. 2. Restart inverter.
OV-Vbatt-H	Battery overvoltage hardware fault	1. Check if any part of the battery input circuit is tripped, ie. battery fuses, battery circuit breaker. 2. Restart inverter.
Over-Load	Backup overload fault	1. Check the load of Backup port is over rating output power or not. 2. Reduce the load of Backup port, then restart inverter.
PV ISO-PRO01/02	PV isolation protection	1. Remove all DC input, reconnect and restart inverter one by one. 2. Identify which string cause the fault and check the isolation of the string.
RelayChk-FAIL	Relay check fail	1. Restart inverter or contact installer.

7. Troubleshooting

Alarm Message	Failure description	Solution
UN-BUS01/02	Under DC bus voltage	1. Check inverter inductor connection. 2. Check driver connection.
UN-G-F01/02	Under grid frequency	1. Use user define function to adjust the protection limit if it's allowed by electrical company.
UN-G-V01/02	Under grid voltage	
12Power-FAULT	12V power supply fault	1. Restart inverter or contact installer.

NOTE:
If the inverter displays any alarm messages listed in Table 7.1, please turn off the inverter and wait for 5 minutes before restarting it . If the alarm persists, please contact Solis after-sales service +1(866)438-8408 or email usservice@solisinverters.com

If you have any technical problems with the hybrid system, please contact Solis after-sales service. We recommend gathering the following information before making contact in order to get a quicker resolution.

Item	Supplemental Information
Inverter serial number (SN)	Serial number can be found on the spec label
Inverter Firmware Version	A six character number that can be found in the information section of the inverter interface page - requires Bluetooth connection
Alarm history	Codes found in the Inverter section of the interface
DC voltages	Use a multimeter to measure the voltages
Detailed description of the problem	Frequency of the occurrence and any other relevant details about the issue
Battery serial number and Firmware version	Consult the battery product manual to determine how to collect this information
Is the system reporting to SolisCloud?	Yes/No - if yes, what is the site ID?
Take pictures showing all the cable connections in the system (Videos preferred)	If this is possible, it will help us to troubleshoot

7. Troubleshooting

7.4 Inverter Firmware

Solis inverters have a few different types of firmware that should all be on the latest version. If one site has several inverters installed, they should all be on the same versions to prevent errors.

Solis Inverter Firmware Types:

DSP: Digital Signal Processor
HMI: Human-Machine-Infterface
AFCI: Arc-Fault-Circuit Interruption
SolisHub: The optional MID sold by Solis

To check which version the inverter is currently on, first connect to the inverter with Bluetooth. Go to the Information tab and be sure that you are on the Inverter tab. Scroll to the bottom and look for the DSP and HMI versions. The AFCI and SolisHub current versions can only be upgraded remotely with the assistance of Solis Technical Support. However, new AFCI and SolisHub firmware versions are released far less frequently than DSP and HMI. It is likely that the inverter does not need to have AFCI and SolisHub firmware upgraded, but best to check with Solis Support.

There are three methods of updating the inverter firmware: (1) remotely (2) locally with Bluetooth, and (3) locally with a tool.

7.4.1 Remote Firmware Updating

The inverter firmware can be updated remotely but only if the inverter has a Solis data logger connected directly to it. The logger must also be connected to the internet. Once that has been done, please call or email Solis after-sales-service to request the firmware be updated remotely.

Please note: Only Solis Tech Support can update inverters remotely.

7.4.2 Local Firmware Updating Through Bluetooth

The recommended method for updating the inverter firmware is locally using the SolisCloud Bluetooth tool. The steps for this process can be found on pages 61-62 (Step 3 of Commissioning). It is highly advisable to upgrade the inverter firmware during the commissioning process before configuring the settings.

7.4.3 Local Firmware Updating with the Solis Upgrade Tool

If the upgrades are not going through using the first two methods, the inverter can be upgraded using a proprietary Solis Upgrade Tool. Please contact Solis Technical Support to request an Update Tool be mailed to you. You will also need to request the firmware files themselves. Solis Technical Support can guide you through the process.

IMPORTANT:
Be sure to set the AC bypass switch to the bypass position during the firmware upgrade. If you do not, the loads on the backup side will be without power until the system goes back to operating normally.

IMPORTANT:
If there are multiple inverters in parallel, please connect one data logger to each inverter to ensure that firmware can be updated remotely. Slave firmware cannot be updated through a logger connected to the master. All inverters in the same system must be on the same firmware version.

8. Specifications

Technical Data	S6-EH1P3.8K-H-US	S6-EH1P5K-H-US
Input DC (PV side)		
Recommended max. PV power	6,080W	8,000W
Max. input voltage	600V	
Rated voltage	380V	
Start-up voltage	80V	
MPPT voltage range	80-520V	
Full load MPPT voltage range	140-450V	
Max. input current per string	16A	
Max. short circuit current per string	25.6A	
Number of MPPTs/Number of strings per MPPT	2/1	3/1
Energy Storage		
Battery type	Lithium-ion	
Battery voltage range	120 - 500V	
Maximum charge/discharge current	25A	
Battery Communication	CAN/RS485	
Number of batteries per inverter	See the Compatibility List	
AC Output (Grid)		
Rated output power	3.8kW	5kW
Max. apparent output power	3.8kW	5kW
Rated output voltage	240 V	
Rated frequency	60 Hz	
Rated output current	15.8A	20.8A
Max. output current	15.8A	20.8A
THDi	<3%	
AC Input (Grid)		
Input voltage range	211-264V	
Max. input current	23.8A	31.2A
Frequency range	58.8-61.2 Hz	

8. Specifications

Technical Data	S6-EH1P3.8K-H-US	S6-EH1P5K-H-US
AC Output (Backup and Off-grid)		
Rated output power	3.8kW	5kW
Max. apparent output power	6.1 kVA, 10 sec	8 kVA, 10 sec
Back-up switch time	< 10 ms	
Phase Power	240V Split-Phase	
Rated output voltage(L1-L2)/(L1/L2-N)	240 V	
AC output voltage range	211-264 V	
Rated grid frequency	60 Hz	
Rated AC output current (continuous)	15.8A	20.8A
Max. output current for 10 seconds	25.4A	33.3A
Max. output current for 300 milliseconds	28.62A	37.44A
Max. allowable phase imbalance	100%	
Backup support configurations	Dedicated loads and whole-home	
Power Factor	> 0.99 (0.8 leading - 0.8 lagging)	
THDv(@linear load)	<3%	
Efficiency		
PV Max. efficiency	97.0%	
PV CEC efficiency	96.5%	
BAT charged by PV Max. efficiency	98.5%	
BAT charged/discharged to AC Max. efficiency	97.0%	
Protection		
Ground fault detection	Yes	
Residual (leakage) current detection	Yes	
Integrated AFCI (DC arc-fault protection)	Yes	
DC reverse-polarity protection	Yes (PV only)	
Rapid Shutdown NEC 2017	Integrated SunSpec-certified Transmitter	
Compatible Rapid Shutdown Receivers	See the Compatibility List	
Protection class/Over voltage category	I/II	

8. Specifications

Technical Data	S6-EH1P3.8K-H-US	S6-EH1P5K-H-US
General data		
Dimensions(H/W/D)	28.35*19.21*8.66 in (720*490*220mm)	
Weight	52.43 lbs (23.78 kg)	
Topology	Transformerless	
Operation temperature range	-25~+60 ℃/-13~+140 ℉	
Ingress protection	TYPE 4X(IP66)	
Noise emission (Typical)	<30 dB (A)	
Cooling method	Natural convection	
Max. operating altitude	13120 ft (4000 m)	
Compliance	UL 1741 SB, UL 1741 SA, IEEE1547.1-2020,UL 1699B, UL 1998, FCC Part 15 Class B, California Rule 21, HECO Rule 14H NEC 690.12-2020,CAN/CSA C22.2107.1-1	
Generator support	Yes; up to 25 kW (with a SolisHub)	
Features		
DC connection	1 in. knockouts for conduit (x2) on the side and bottom; Spring clamp terminals	
AC connection	1.5 in. knockouts for conduit (x3) on the side and bottom; Spring clamp terminals	
Interface	LED indicator lights, Bluetooth/Phone app	
Monitoring Platform	SolisCloud (modbus map and API sharing available upon request)	
Communication	RS485, Optional: Cellular, Wi-Fi, LAN	
Warranty	10 years standard (Extendable to 20 years)	

8. Specifications

Technical Data	S6-EH1P7.6K-H-US
Input DC (PV side)	
Recommended max. PV power	12160W
Max. input voltage	600V
Rated voltage	380V
Start-up voltage	80V
MPPT voltage range	80-520V
Full load MPPT voltage range	175-450V
Max. input current per string	16A
Max. short circuit current per string	25.6A
Number of MPPTs/Number of strings per MPPT	4/1
Energy Storage	
Battery type	Lithium-ion
Battery voltage range	120 - 500V
Maximum charge/discharge current	50A
Battery Communication	CAN/RS485
Number of batteries per inverter	See Battery Compatibility Sheet
AC Output (Grid)	
Rated output power	7.6kW
Max. apparent output power	7.6kW
Rated output voltage	240 V
Rated frequency	60 Hz
Rated output current	31.7A
Max. output current	31.7A
THDi	<3%
AC Input (Grid)	
Input voltage range	211-264V
Max. input current	47.6A
Frequency range	58.8-61.2 Hz

8. Specifications

Technical Data	S6-EH1P7.6K-H-US
AC Output (Backup and Off-grid)	
Rated output power	7.6kW
Max. apparent output power	12.2 kVA, 10 sec
Back-up switch time	< 10 ms
Phase Power	240V Split-Phase
Rated output voltage(L1-L2)/(L1/L2-N)	240 V
AC output voltage range	211-264 V
Rated grid frequency	60 Hz
Rated AC output current (continuous)	31.7A
Max. output current for 10 seconds	50.7A
Max. output current for 300 milliseconds	57.06A
Max. allowable phase imbalance	100%
Backup support configurations	Dedicated loads and whole-home
Power Factor	> 0.99 (0.8 leading - 0.8 lagging)
THDv(@linear load)	<3%
Efficiency	
PV Max. efficiency	97.6%
PV CEC efficiency	97.0%
BAT charged by PV Max. efficiency	98.5%
BAT charged/discharged to AC Max. efficiency	97.0%
Protection	
Ground fault detection	Yes
Residual (leakage) current detection	Yes
Integrated AFCI (DC arc-fault protection)	Yes
DC reverse-polarity protection	Yes (PV only)
Rapid Shutdown NEC 2017	Integrated SunSpec-certified Transmitter
Compatible Rapid Shutdown Receivers	See MLRSD compatibility sheet
Protection class/Over voltage category	I/II

8. Specifications

Technical Data	S6-EH1P7.6K-H-US
General data	
Dimensions(H/W/D)	29.53*22.05*8.66 in (750*560*220mm)
Weight	71.74 lbs (32.54 kg)
Topology	Transformerless
Operation temperature range	-25~+60 ℃/-13~+140 ℉
Ingress protection	TYPE 4X(IP66)
Noise emission (Typical)	<30 dB (A)
Cooling method	Natural convection
Max. operating altitude	13,120 ft (4000 m)
Compliance	UL1741 SB, UL1741 SA, IEEE1547.1-2020, UL1699B, UL1998, FCC Part 15 Class B, California Rule 21, HECO Rule 14H NEC 690.12-2020,CAN/CSA C22.2107.1-1
Generator support	Yes; up to 25 kW (with a SolisHub)
Features	
DC connection	1 in. knockouts for conduit (x2) on the side and bottom; Spring clamp terminals
AC connection	1.5 in. knockouts for conduit (x3) on the side and bottom; Spring clamp terminals
Interface	LED indicator lights, Bluetooth/Phone app
Monitoring Platform	SolisCloud (modbus map and API sharing available upon request)
Communication	RS485, Optional: Cellular, Wi-Fi, LAN
Warranty	10 years standard (Extendable to 20 years)

8. Specifications

Technical Data	S6-EH1P9.9K-H-US	S6-EH1P10K-H-US
Input DC (PV side)		
Recommended max. PV power	15,840W	16,000W
Max. input voltage	600V	
Rated voltage	380V	
Start-up voltage	80V	
MPPT voltage range	80-520V	
Full load MPPT voltage range	230-450V	
Max. input current per string	16A	
Max. short circuit current per string	25.6A	
Number of MPPTs/Number of strings per MPPT	4/1	
Energy Storage		
Battery type	Lithium-ion	
Battery voltage range	120 - 500V	
Maximum charge/discharge current	50A	
Battery Communication	CAN/RS485	
Number of batteries per inverter	See Battery Compatibility Sheet	
AC Output (Grid)		
Rated output power	9.9kW	10kW
Max. apparent output power	9.9kW	10kW
Rated output voltage	240 V	
Rated frequency	60 Hz	
Rated output current	41.3A	41.7A
Max. output current	41.3A	41.7A
THDi	<3%	
AC Input (Grid)		
Input voltage range	211-264V	
Max. input current	61.9A	62.6A
Frequency range	58.8-61.2 Hz	

8. Specifications

Technical Data	S6-EH1P9.9K-H-US	S6-EH1P10K-H-US
AC Output (Backup and Off-grid)		
Rated output power	9.9kW	10kW
Max. apparent output power	15.8 kVA, 10 sec	16 kVA, 10 sec
Back-up switch time	< 10 ms	
Phase Power	240V Split-Phase	
Rated AC output voltage	240 V	
AC output voltage range	211-264 V	
Rated frequency	60 Hz	
Rated AC output current (continuous)	41.3A	41.7A
Max. output current for 10 seconds	66.0A	66.7A
Max. output current for 300 milliseconds	70.3A	75.06A
Max. allowable phase imbalance	100%	
Backup support configurations	Dedicated loads and whole-home	
Power Factor	>0.99 (0.8 leading - 0.8 lagging)	
THDv(@linear load)	<3%	
Efficiency		
PV Max. efficiency	97.6%	
PV CEC efficiency	97.0%	
BAT charged by PV Max. efficiency	98.5%	
BAT charged/discharged to AC Max. efficiency	97.0%	
Protection		
Ground fault detection	Yes	
Residual (leakage) current detection	Yes	
Integrated AFCI (DC arc-fault protection)	Yes	
DC reverse-polarity protection	Yes (PV only)	
Rapid Shutdown NEC 2017	Integrated SunSpec-certified Transmitter	
Compatible Rapid Shutdown Receivers	See the Compatibility List	
Protection class/Over voltage category	I/II	

8. Specifications

Technical Data	S6-EH1P9.9K-H-US	S6-EH1P10K-H-US
General data		
Dimensions(H/W/D)	29.53*22.05*8.66 in (750*560*220mm)	
Weight	71.74 lbs (32.54 kg)	
Topology	Transformerless	
Operation temperature range	-25~+60 ℃/-13~+140 ℉	
Ingress protection	TYPE 4X (Ip66)	
Noise emission (Typical)	<30 dB (A)	
Cooling method	Natural convection	
Max.operation altitude	13,120 ft (4000 m)	
Compliance	UL1741 SB, UL1741 SA, IEEE1547.1-2020, UL1699B, UL1998, FCC Part15 Class B, California Rule 21, HECO Rule 14H NEC 690.12-2020,CAN/CSA C22.2107.1-1	
Generator support	Yes; up to 25 kW (with a SolisHub)	
Features		
DC connection	1 in. knockouts for conduit (x2) on the side and bottom; Spring clamp terminals	
AC connection	1.5 in. knockouts for conduit (x3) on the side and bottom; Spring clamp terminals	
Interface	LED indicator lights, Bluetooth/Phone app	
Monitoring Platform	SolisCloud (modbus map and API sharing available upon request)	
Communication	RS485, Optional: Cellular, Wi-Fi, LAN	
Warranty	10 years standard (Extendable to 20 years)	

8. Specifications

Technical Data	S6-EH1P11.4K-H-US
Input DC (PV side)	
Recommended max. PV power	18,240W
Max. input voltage	600V
Rated voltage	380V
Start-up voltage	80V
MPPT voltage range	80-520V
Full load MPPT voltage range	245-450V
Max. input current per string	16A
Max. short circuit current per string	25.6A
Number of MPPTs/Number of strings per MPPT	4/1
Energy Storage	
Battery type	Lithium-ion
Battery voltage range	120 - 500V
Maximum charge/discharge current	50A
Battery Communication	CAN/RS485
Number of batteries per inverter	See Battery Compatibility Sheet
AC Output (Grid)	
Rated output power	11.4kW
Max. apparent output power	11.4kW
Rated output voltage	240 V
Rated frequency	60 Hz
Rated output current	47.5A
Max. output current	47.5A
THDi	<3%
AC Input (Grid)	
Input voltage range	211-264V
Max. input current	71.3A
Frequency range	58.8-61.2 Hz

8. Specifications

Technical Data	S6-EH1P11.4K-H-US
AC Output (Backup and Off-grid)	
Rated output power	11.4kW
Max. apparent output power	18.2 kVA, 10 sec
Back-up switch time	< 10 ms
Phase Power	240V Split-Phase
Rated AC output voltage	240 V
AC output voltage range	211-264 V
Rated frequency	60 Hz
Rated AC output current (continuous)	47.5A
Max. output current for 10 seconds	76A
Max. output current for 300 milliseconds	85.5A
Max. allowable phase imbalance	100%
Backup support configurations	Dedicated loads and whole-home
Power Factor	> 0.99 (0.8 leading - 0.8 lagging)
THDv(@linear load)	<3%
Efficiency	
PV Max. efficiency	97.6%
PV CEC efficiency	97.0%
BAT charged by PV Max. efficiency	98.5%
BAT charged/discharged to AC Max. efficiency	97.0%
Protection	
Ground fault detection	Yes
Residual (leakage) current detection	Yes
Integrated AFCI (DC arc-fault protection)	Yes
DC reverse-polarity protection	Yes (PV only)
Rapid Shutdown NEC 2017	Integrated SunSpec-certified Transmitter
Compatible Rapid Shutdown Receivers	See the Compatibility List
Protection class/Over voltage category	I/II

8. Specifications

Technical Data	S6-EH1P11.4K-H-US
General data	
Dimensions(H/W/D)	29.53*22.05*8.66 in (750*560*220mm)
Weight	71.74 lbs (32.54 kg)
Topology	Transformerless
Operation temperature range	-25~+60 ℃/-13~+140 ℉
Ingress protection	TYPE 4X (Ip66)
Noise emission (Typical)	<30 dB (A)
Cooling method	Natural convection
Max.operation altitude	13,120 ft (4000 m)
Compliance	UL1741 SB, UL1741 SA, IEEE1547.1-2020, UL1699B, UL1998, FCC Part15 Class B, California Rule 21, HECO Rule 14H NEC 690.12-2020,CAN/CSA C22.2107.1-1
Generator support	Yes; up to 25 kW (with a SolisHub)
Features	
DC connection	1 in. knockouts for conduit (x2) on the side and bottom; Spring clamp terminals
AC connection	1.5 in. knockouts for conduit (x3) on the side and bottom; Spring clamp terminals
Interface	LED indicator lights, Bluetooth/Phone app
Monitoring Platform	SolisCloud (modbus map and API sharing available upon request)
Communication	RS485, Optional: Cellular, Wi-Fi, LAN
Warranty	10 years standard (Extendable to 20 years)

9. Appendix

9.1 Temperature Derating Curve

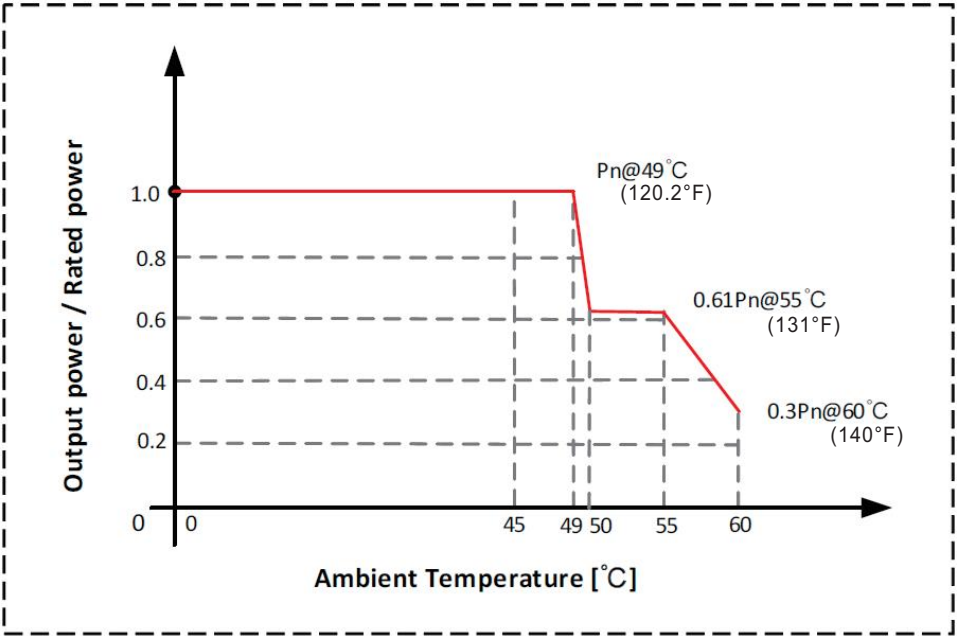

9.2 Inverter Internal Topology Overview

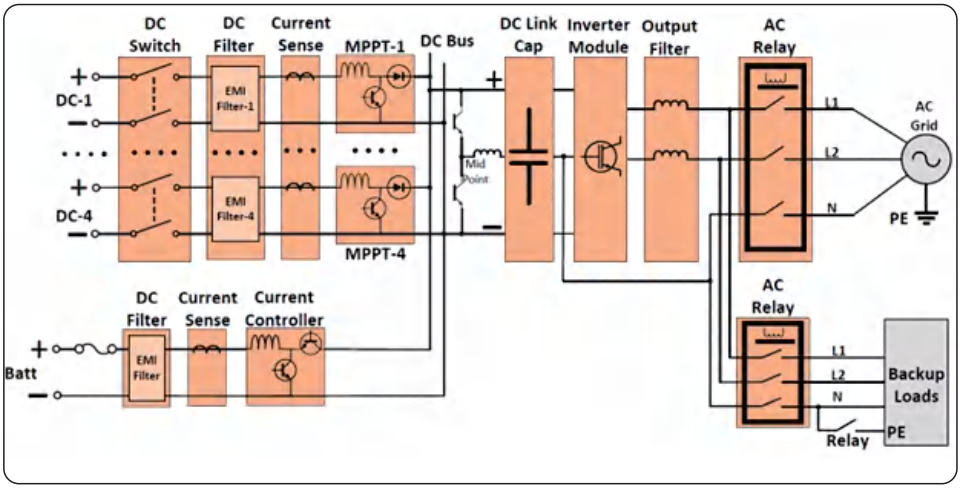

9.3 UL 1741 Certification

CSA GROUP™

Certificate of Compliance

Certificate: 80127112 **Master Contract:** 273488

Project: 80127113 **Date Issued:** 2023-01-13

Issued to: Ginlong Technologies Co., Ltd.
No.57, Jintong Road, Xiangshan
Ningbo, Zhejiang, 130 315712
CHINA

Attention: Ruyi Pan

The products listed below are eligible to bear the CSA Mark shown with adjacent indicators 'C' and 'US' for Canada and US or with adjacent indicator 'US' for US only or without either indicator for Canada only

C US

Issued by: Magic Zhang
Magic Zhang

PRODUCTS

CLASS - C531109 - POWER SUPPLIES - Distributed Generation Power Systems Equipment
CLASS - C531189 - POWER SUPPLIES - Distributed Generation-Power Systems Equipment - Certified to U.S. Standards

Bi-directional Transformerless Utility Interactive Power Conversion Equipment, S6-EH1P(3.8-11.4)K-H-MEX series, include Models S6-EH1P3.8K-H-MEX, S6-EH1P5K-H-MEX, S6-EH1P6K-H-MEX, S6-EH1P7.6K-H-S-MEX, S6-EH1P7.6K-H-L-MEX, S6-EH1P8K-H-MEX, S6-EH1P10K-H-MEX and S6-EH1P11.4K-H-MEX, permanently connected.

Bi-directional Transformerless Grid Support Utility Interactive Power Conversion Equipment, S6-EH1P(3.8-11.4)K-H-US series, include Models S6-EH1P3.8K-H-US, S6-EH1P5K-H-US, S6-EH1P6K-H-US, S6-EH1P7.6K-H-S-US, S6-EH1P7.6K-H-L-US, S6-EH1P8K-H-US, S6-EH1P10K-H-US and S6-EH1P11.4K-H-US, permanently connected.

For details related to rating, size, configuration, etc., reference should be made to the CSA Certification Record, Certificate of Compliance, Annex A, or the Descriptive Report.

DQD 507 Rev. 2019-04-30 © 2018 CSA Group. All rights reserved. Page 1

Certificate: 80127112
Project: 80127113

Master Contract: 273488
Date Issued: 2023-01-13

APPLICABLE REQUIREMENTS

CSA-C22.2 No.107.1-16	-	Power Conversion Equipment
*UL Std No. 1741	-	Inverters, Converters, Controllers and Interconnection System Equipment for Use With Distributed Energy Resources (Third Edition, Dated September 28, 2021)
**UL 1699B	-	Photovoltaic (PV) DC Arc-Fault Circuit Protection (First Edition, Revision Dated August 22, 2018)
**UL1741 CRD	-	Non-Isolated EPS Interactive PV Inverters Rated Less Than 30Kva (Dated April 26, 2010)

*Note: Conformity to UL 1741(Third Edition, Dated September 28, 2021) includes compliance with applicable requirements of IEEE 1547-2003 (R2008), IEEE 1547a-2014, IEEE 1547.1-2005(R2011), IEEE 1547.1a-2015 for all models. Grid support function is verified according to UL 1741 Supplement SA8-SA18 with the SRDs of California Electric Rule 21, and also verified according to UL 1741 Supplement SB and IEEE 1547.1-2020 with the SRDs of IEEE 1547-2018 and IEEE 1547a-2020 for S6-EH1P(3.8-11.4)K-H-US series inverter. While the grid support function evaluated according to IEEE 1547.1-2020, the interoperability is verified with IEEE 2030.5-2018 communication protocol.

**Note: The functional safety has been evaluated according to applicable requirement of UL 1998-Edition 3 as required by the product standard.

Notes:

Products certified under Class C531109 have been certified under CSA's ISO/IEC 17065 accreditation with the Standards Council of Canada (SCC). www.scc.ca

SCC Accredited CB-P/S OCPS Accrédité CCN

© 2018 CSA Group. All rights reserved.

9.4 UL 1741 Power Control Systems (PCS) CRD

Certificate of Compliance

Certificate: 80127112 **Master Contract:** 273488

Project: 80197996 **Date Issued:** 2024-04-01

Issued to: Ginlong Technologies Co., Ltd.
No.57, Jintong Road, Xiangshan
Ningbo, Zhejiang, 315712
CHINA

Attention: Ruyi Pan

The products listed below are eligible to bear the CSA Mark shown with adjacent indicators 'C' and 'US' for Canada and US or with adjacent indicator 'US' for US only or without either indicator for Canada only

C US

Issued by: Magic Zhang
Magic Zhang

PRODUCTS

CLASS - C531109 - POWER SUPPLIES - Distributed Generation Power Systems Equipment
CLASS - C531189 - POWER SUPPLIES - Distributed Generation-Power Systems Equipment - Certified to U.S. Standards

Bi-directional Transformerless Grid Support Utility Interactive Power Conversion Equipment, S6-EH1P(3.8-11.4)K-H-US series, include Models S6-EH1P3.8K-H-US, S6-EH1P5K-H-US, S6-EH1P6K-H-US, S6-EH1P7.6K-H-S-US, S6-EH1P7.6K-H-US, S6-EH1P8K-H-US, S6-EH1P9.9K-H-US, S6-EH1P10K-H-US and S6-EH1P11.4K-H-US, permanently connected.

For details related to rating, size, configuration, etc., reference should be made to the CSA Certification Record, Certificate of Compliance, Annex A, or the Descriptive Report.

APPLICABLE REQUIREMENTS

CSA-C22.2 No.107.1-16	-	Power Conversion Equipment
*UL Std No. 1741	-	Inverters, Converters, Controllers and Interconnection System Equipment for Use With Distributed Energy Resources (Third Edition, Dated May 19, 2023)

DQD 507 Rev. 2019-04-30 © 2018 CSA Group. All rights reserved. Page 1

Certificate: 80127112 **Master Contract:** 273488
Project: 80197996 **Date Issued:** 2024-04-01

**UL 1699B	-	Photovoltaic (PV) DC Arc-Fault Circuit Protection (First Edition, Revision Dated May 18, 2021)
**UL1741 CRD	-	Non-Isolated EPS Interactive PV Inverters Rated Less Than 30kV A (Dated April 26, 2010)
***UL 1741 CRD	-	Power Control Systems (PCS) (Dated March 08, 2019)

*Note: Conformity to UL 1741(Third Edition, Dated May 19, 2023) includes compliance with applicable requirements of IEEE 1547-2003 (R2008), IEEE 1547a-2014, IEEE 1547.1-2005(R2011), IEEE 1547.1a-2015. Grid support function is verified according to UL 1741 Supplement SA8-SA18 with the SRDs of California Electric Rule 21, and also verified according to UL 1741 Supplement SB and IEEE 1547.1-2020 with the SRDs of IEEE 1547-2018, IEEE 1547a-2020 and Hawaiian Electric Co. SRD-V2.0. While the grid support function evaluated according to IEEE 1547.1-2020, the interoperability is verified with IEEE 2030.5-2018 communication protocol.

**Note: The functional safety has been evaluated according to applicable requirement of UL 1998-Edition 3 as required by the product standard.

***Note: The evaluated ESS operating modes according to UL 1741 PCS CRD are: Export Only Mode and Import Only Mode.

Notes:

Products certified under Class C531109 have been certified under CSA's ISO/IEC 17065 accreditation with the Standards Council of Canada (SCC). www.scc.ca

© 2018 CSA Group. All rights reserved.

9. Appendix

9.5 Default Setting for IEEE1547-2018 (UL-240V-18)

Parameter	Adjustment Range (p.u.)	Default (p.u.)	Description
OV-G-V01	1.10< V ≤1.21	1.10 p.u.	Set grid over-voltage protection 01 value
OV-G-V01-T	0.1-13 S	13 S	Grid over-voltage protection 01 trip time
OV-G-V02	1.20< V ≤1.30	1.20 p.u.	Set grid over-voltage protection 02 value
OV-G-V02-T	0.1-5 S	0.16 S	Grid over-voltage protection 02 trip time
UN-G-V01	0.5≤ V <0.88	0.88 p.u.	Set grid under-voltage protection 01 value
UN-G-V01-T	2.0-50 Sec.	21 S	Grid under-voltage protection 01 trip time
UN-G-V02	0.45≤ V <0.70	0.5 p.u.	Set grid under-voltage protection 02 value
UN-G-V02-T	0.16-21 S	2 S	Grid under-voltage protection 02 trip time
UN-G-V03	0.050< V <0.5	0.5 p.u.	Set grid under-voltage protection 03 value
UN-G-V03-T	0.16-21 S	2 S	Grid under-voltage protection 03 trip time
OV-G-F01	60.5< F <66 Hz	61.2 Hz	Set grid over-frequency protection 01 value
OV-G-F01-T	180-1000 S	300 S	Set grid over-frequency protection 01 trip time
OV-G-F02	61.2< F <66 Hz	62 Hz	Set grid over-frequency protection 02 value
OV-G-F02-T	0.16-1000 S	0.16 S	Set grid over-frequency protection 02 trip time
UN-G-F01	50< F <59 Hz	58.5 Hz	Set grid under-frequency protection 01 value
UN-G-F01-T	180-1000 S	300 S	Set grid under-frequency protection 01 trip time
UN-G-F02	50< F <58 Hz	56.5 Hz	Set grid under-frequency protection 02 value
UN-G-F02-T	0.16-1000 S	0.16 S	Set grid under-frequency protection 02 trip time
Reconnection Voltage	0.88≤ V ≤0.95 1.05≤ V ≤1.06	0.917p.u. 1.05 p.u.	Set grid recovery voltage range after grid fault
Reconnection Frequency	59≤ F ≤59.9 60.1≤ F ≤61	59.5Hz 60.1Hz	Set grid recovery frequency range after grid fault
Reconnection Time after Fault	0-600 S	300 S	Set reconnection time after a fault is cleared
Ramp-up Slew Rate	0.10-100%	100%W/S	Set Ramp-up power slew rate during start-up
Reconnect Slew Rate	0.10-100%	0.33%W/S	Set Ramp-up power slew rate during reconnect

9. Appendix

Parameter	Adjustment Range (p.u.)	Default (p.u.)	Description
Volt Watt P3Tau	0.5-60 S	10 S	Set the time to ramp up to 90% of the new active power target in response to the change in voltage
Volt Var Q3Tau	1-90 S	5 S	Set the time to ramp up to 90% of the new reactive power target in response to the change in voltage
Dead Band-OF	60.017-61 Hz	60.036Hz	Set OV frequency start dead band for power derate
Droop-OF	2-5 %	5 %	Set OV frequency derate droop slope
Response Time	0.2-10 S	5 S	Set frequency derate response time
Dead Band-UF	59-59.983 Hz	59.964 Hz	Set UN frequency start dead band for power derate
Droop-UF	2-5 %	5 %	Set UN frequency derate droop slope
Droop Pmin	0-100 %	0 %	Set frequency droop P minimum
Volt-Watt	Enabled/ Disabled	Enabled	Set Volt - Watt function
V1	Hybrid: 0.40≤V≤1.00 Grid-tied:0.90≤V≤1.30	Hybrid: 0.5 p.u. Grid-tied:p.u.	Set grid voltage V1 limit for Volt-Watt control
P1	0-100 % Pn	100% Pn	Set power P1 for Volt-Watt control
V2	Hybrid: 0.60≤V≤1.05 Grid-tied:1.00≤V≤1.35	Hybrid: 0.7 p.u. Grid-tied: p.u.	Set grid voltage V2 limit for Volt-Watt control
P2	0-100 % Pn	100% Pn	Set power P2 for Volt-Watt control
V3	1.05≤ V ≤1.09	1.06 p.u.	Set grid voltage V3 limit for Volt-Watt control
P3	0-100 % Pn	100% Pn	Set power P3 for Volt-Watt control
V4	1.06≤V≤1.10	1.10 p.u.	Set grid voltage V4 limit for Volt-Watt control
P4	0-100 % Pn	20% Pn	Set power P4 for Volt-Watt control
Volt-Var	Enabled/ Disabled	Enable	Set Volt-Var function
V1	0.77≤V≤1.03	0.92 p.u.	Set grid voltage V1 limit for Volt-Var control
Q1	0-60% Sn	+44% Sn	Set reactive power Q1 for Volt-Var control
V2	0.92≤V≤1.05	0.98 p.u.	Set grid voltage V2 limit for Volt-Var control
Q2	-60-60% Sn	0% Sn	Set reactive power Q2 for Volt-Var control
V3	0.95≤V≤1.08	1.02 p.u.	Set grid voltage V3 limit for Volt-Var control
Q3	-60-60% Sn	0% Sn	Set reactive power Q3 for Volt-Var control
V4	0.97≤V≤1.23	1.08 p.u.	Set grid voltage V4 limit for Volt-Var control
Q4	-60-0% Sn	-44% Sn	Set reactive power Q4 for Volt-Var control
Fixed PF	-0.8 -+0.8	1	Set Fixed Power Factor limit
Reactive Power	-60 -60 %	0%	Set Reactive Power level

9. Appendix

9.6 Default Setting for California Rule 21 (R21P3-24A)

Parameter	Adjustment Range (pu)	Default (pu)	Description
OV-G-V01	1.10≤V≤1.21	1.10Vn	Set grid over-voltage protection 01 value
OV-G-V01-T	0.1≤t≤13 S	13 S	Grid over-voltage protection 01 trip time
OV-G-V02	1.20≤V≤1.30	1.20Vn	Set grid over-voltage protection 02 value
OV-G-V02-T	0.1≤t≤5 S	0.16 S	Grid over-voltage protection 02 trip time
UN-G-V01	0.05≤V≤0.88	0.88Vn	Set grid under-voltage protection 01 value
UN-G-V01-T	2.0≤t≤50 S	21 S	Grid under-voltage protection 01 trip time
UN-G-V02	0.05≤V≤0.70	0.5Vn	Set grid under-voltage protection 02 value
UN-G-V02-T	0.16≤t≤21 S	2 S	Grid under-voltage protection 02 trip time
UN-G-V03	0.05≤V≤0.50	0.5Vn	Set grid under-voltage protection 03 value
UN-G-V03-T	0.16≤t≤21 S	2 S	Grid under-voltage protection 03 trip time
OV-G-F01	60.5≤f≤66 Hz	61.2 Hz	Set grid over-frequency protection 01 value
OV-G-F01-T	180≤t≤1000 S	300 S	Set grid over-frequency protection 01 trip time
OV-G-F02	61.2≤f≤66 Hz	62 Hz	Set grid over-frequency protection 02 value
OV-G-F02-T	0.16≤t≤1000 S	0.16 S	Set grid over-frequency protection 02 trip time
UN-G-F01	50≤f≤59 Hz	58.5 Hz	Set grid under-frequency protection 01 value
UN-G-F01-T	180≤t≤1000 S	300 S	Set grid under-frequency protection 01 trip time
UN-G-F02	50≤f≤58 Hz	56.5 Hz	Set grid under-frequency protection 02 value
UN-G-F02-T	0.16≤t≤1000 S	0.16 S	Set grid under-frequency protection 02 trip time
Reconnection Voltage	0.88≤V≤0.95 1.05≤V≤1.06	0.917Vn 1.05Vn	Set grid recovery voltage range after grid fault
Reconnection Frequency	59≤f≤59.9 60.1≤f≤61	59.5Hz 60.1Hz	Set grid recovery frequency range after grid fault
Reconnection Time after Fault	0≤t≤600 S	300 S	Set reconnection time after a fault is cleared
Ramp-up Slew Rate	0.10-100%	100%Pn/S	Set Ramp-up power slew rate during start-up
Reconnect Slew Rate	0.10-100%	0.33%Pn/S	Set Ramp-up power slew rate during reconnect

9. Appendix

Parameter	Adjustment Range (pu)	Default (pu)	Description
Volt Watt P3Tau	0.5≤t≤60 S	10 S	Set the time to ramp up to 90% of the new active power target in response to the change in voltage
Volt Var Q3Tau	1≤t≤90 S	5 S	Set the time to ramp up to 90% of the new reactive power target in response to the change in voltage
Dead Band-OF	60.017≤f≤61 Hz	60.036Hz	Set OF frequency start dead band for power derate
Droop-OF	2-5 %	5 %	Set OF frequency derate droop slope
Response Time	0.2≤t≤10 S	5 S	Set frequency derate response time
Dead Band-UF	59≤f≤59.983 Hz	59.964 Hz	Set UF frequency start dead band for power derate
Droop-UF	2-5 %	5 %	Set UF frequency derate droop slope
Droop Pmin	0-100 %	0 %	Set frequency droop P minimum
Volt-Watt	Enabled/ Disabled	Enabled	Set Volt - Watt function
V1	Hybrid: 0.40≤V≤1.00 Grid-tied:0.90≤V≤1.30	Hybrid: 1.00Vn Grid-tied:1.00Vn	Set grid voltage V1 limit for Volt-Watt control
P1	0-100 % Pn	100% Pn	Set power P1 for Volt-Watt control
V2	Hybrid: 0.60≤V≤1.05 Grid-tied:1.00≤V≤1.35	Hybrid: 1.00Vn Grid-tied:1.00Vn	Set grid voltage V2 limit for Volt-Watt control
P2	0-100 % Pn	100% Pn	Set power P2 for Volt-Watt control
V3	1.05≤V≤1.09	1.06Vn	Set grid voltage V3 limit for Volt-Watt control
P3	0-100 % Pn	100% Pn	Set power P3 for Volt-Watt control
V4	1.06≤V≤1.10	1.10Vn	Set grid voltage V4 limit for Volt-Watt control
P4	0-100 % Pn	Hybrid: 0%Pn Grid-tied: 0%Pn	Set power P4 for Volt-Watt control
Volt-Var	Enabled/ Disabled	Enable	Set Volt-Var function
V1	0.77≤V≤1.03	0.92Vn	Set grid voltage V1 limit for Volt-Var control
Q1	0-60% Sn	+30% Sn	Set reactive power Q1 for Volt-Var control
V2	0.92≤V≤1.05	0.97Vn	Set grid voltage V2 limit for Volt-Var control
Q2	-60-60% Sn	0% Sn	Set reactive power Q2 for Volt-Var control
V3	0.95≤V≤1.08	1.03Vn	Set grid voltage V3 limit for Volt-Var control
Q3	-60-60% Sn	0% Sn	Set reactive power Q3 for Volt-Var control
V4	0.97≤V≤1.23	1.07Vn	Set grid voltage V4 limit for Volt-Var control
Q4	-60-0% Sn	-30% Sn	Set reactive power Q4 for Volt-Var control
Fixed PF	-0.8 -+0.8	1.0	Set Fixed Power Factor limit
Reactive Power	-60 -60 %	0%	Set Reactive Power level

9. Appendix

9.7 FCC Instructions

This device complies with part 15 of the FCC Rules. Operation is subject to the following two conditions: (1) This device may not cause harmful interference, and (2) this device must accept any interference received, including interference that may cause undesired operation.

FCC WARNING:
Any Changes or modifications not expressly approved by the party responsible for compliance could void the user's authority to operate the equipment.

Note:
This equipment has been tested and found to comply with the limits for a Class B digital device, pursuant to part 15 of the FCC Rules. These limits are designed to provide reasonable protection against harmful interference in a residential installation. This equipment generates uses and can radiate radio frequency energy and, if not installed and used in accordance with the instructions, may cause harmful interference to radio communications. However, there is no guarantee that interference will not occur in a particular installation. If this equipment does cause harmful interference to radio or television reception, which can be determined by turning the equipment off and on, the user is encouraged to try to correct the interference by one or more of the following measures:

-Reorient or relocate the receiving antenna.
-Increase the separation between the equipment and receiver.
-Connect the equipment into an outlet on a circuit different from that to which the receiver is connected.
-Consult the dealer or an experienced radio/TV technician for help.

This equipment complies with FCC radiation exposure limits set forth for an uncontrolled environment. This equipment should be installed and operated with minimum distance 20cm between the radiator & your body.

Solis USA
12333 Sowden Road, Ste B
Houston, TX, 77080
Tel: +1(866)438-8408
Email: usservice@solisinverters.com
Web: www.solisinverters.com/us

If you encounter any problems with the inverter, please take note of the inverter serial number and then contact us using the phone number or email listed above.

SunSpec Certified

Compliant with CA Rule 21 & HECO Rule 14H
Certified to UL 1741 SA and UL 1741 SB
Certified to UL Std. No. 1741-Second Edition
& CSA-C22.2 No.107.1-16