LIVOLTEK®
Solar Hybrid Expert

USER MANUAL



GT1 2.5-10KW

Copy Declaration

The copyright of this munual belongs to Hangzhou Livoltek Power Co.,Ltd. All rights reserved. Without the written permission of the company, Any unit or individual shall not extract or reproduce part or all of the contents of this document, and shall not transmit it in any form.

Ver.00

Table of Contents

1. About This Manual 1
   - 1.1 Scope 1
   - 1.2 Intended Audience 1
   - 1.3 Symbols Used 1
   - 1.4 How to use this manual 1
2. Safety 2
   - 2.1 Product Description 2
   - 2.2 Important Safety Instructions 2
   - 2.3 Symbol on the Type Label 4
3. Product Overview 5
   - 3.1 View of the Inverter 5
   - 3.2 Dimension 7
   - 3.3 Terminal of the Inverter 7
   - 3.4 System Dimension 7
4. Scope of Delivery 8
5. Mechanical Mounting 9
   - 5.1 Requirements for Mounting 9
   - 5.2 Mounting Instructions 13
6. Electrical Connection 15
   - 6.1 PV Connection 16
   - 6.2 Grid Output Connection 19
   - 6.3 Communication Connection 21
   - 6.4 Earth Connection 23
   - 6.5 Wi-Fi Connection 25
   - 6.6 AFCI (optional) 26
   - 6.7 Installation Verification 27
7. System Operation 28
   - 7.1 Powering ON the Inverter 28
   - 7.2 Powering OFF the Inverter 28
   - 7.3 LEDs and Graphical Display 29
8. Communication Mode Description 30
9. Troubleshooting 33
10. Technical Data 38
11. Decommissioning 42
12. Disclaimer 43

1. About This Manual

1.1 Scope

This manual is valid for grid-tied Inverter:

GT1-2K5D2	GT1-3KD2	GT1-3K3D2	GT1-4KD2
GT1-5KD2	GT1-5KD2C	GT1-6KD2	
GT1-7KT2	GT1-8KT2	GT1-9KT2	GT1-10KT2

1.2 Intended Audience

The manual is intended for photovoltaic (PV) inverter operating personnel and qualified electrical technicians. Any electrical installation and maintenance on this inverter must be performed by qualified electricians by professional electrical personnel who has obtained the license from local authorities.

1.3 SymbolsUsed

Safety instructions will be highlighted with the following symbols. These important instructions must be followed during installation, operation and maintenance of the inverter.

Symbol	Description
⚠ DANGER	Indicates a hazard with a high level of risk that, if not avoided, will result in death or serious injury.
⚠ WARNING	Indicates a hazard with a medium level of risk that, if not avoided, could result in death or serious injury.
⚠ CAUTION	Indicates a hazard with a low level of risk that, if not avoided, could result in minor or moderate injury.
NOTICE	Indicates a situation that, if not avoided, could result in equipment or property damage.

1.4 Howtouse thismanual

Read the manual and other related documents before performing any operation on the inverter. Documents must be stored carefully and be available at all times. *The information in this manual is subject to change without notice. Please check www.livoltek.com for more information.*

2. Safety

2.1 Product Description

LIVOLTEK GT1 2.5~10kW series grid-tied inverter, ideal for home, business and remote locations. The inverter generates new able electricity from solar energy, and provides Pure Sine Wave AC output for connected equipment. Please read and follow all the instructions and cautions on the inverter and this user manual during installation, operation or maintenance at all times.

2.2 Important Safety Instructions

The safety instructions in this manual cannot cover all the precautions that should be followed. Perform operations considering actual onsite conditions. LIVOLTEK shall not be held liable for any damage caused by violation of the safety instructions in this manual.

2.2.1 Personnel Safety

- The inverter must be installed, electrically connected, operated and maintained by specially trained technician;
- The qualified technician must be familiar with the safety regulations of electrical system, working process of PV power generation system, and standards of local power grid;
- The technician must read through this User Manual carefully before any operations.

2.2.2 Inverter Protection

⚠ WARNING

Do not disconnect the PV connectors when the inverter is running.

Ensure that there is no voltage or current before installing or disconnecting any connectors.

All safety instructions, warning labels, and nameplate on the inverter should not be removed or covered.

⚠ WARNING

When the photovoltaic array is exposed to light, it supplies a dc voltage to this equipment.

⚠ CAUTION

Do not touch any hot parts (such as the heat sink) during operation.

⚠ CAUTION

Hot surfaces – To reduce the risk of burns – Do not touch.

"Do not remove cover until 5 minutes after disconnecting all sources of supply."

NOTICE

As soon as receiving the inverter please check if it is damaged during its transportation. If yes, please contact your dealer immediately.

Only qualified personnel can change the country settings.

- Adequate ventilation must be provided for inverter installation location Mount the inverter in vertical direction, and ensure that no objects block the heat dissipation

2.3 Symbol on the Type Label

Symbol	Explanation
	CE mark. The inverter complies with the requirements of the applicable CE guild linse.
	UKCA mark. The inverter complies with the requirements of the applicable UKCA guidelines.
	UKNI mark. The inverter complies with the requirements of the applicable UKNI guidelines.
	Direct Current (DC)
	Alternating Current (AC)
	Point of connection for grounding protection
	RCM remark.
	SAA certification.
	Beware of hot surface. The inverter can become hot during operation. Avoid contact during operation.
	Danger of high voltages. Danger to life due to high voltages in the inverter!
	Danger. Risk of electric shock!
	Observe enclosed documentation.
	The inverter can not be disposed together with the household waste. Disposal information can be found in the enclosed documentation.
	Danger to life due to high voltage. There is residual voltage in the inverter which needs 5 min to discharge. ▪ Wait 5 min before you open the upper lid or the DC lid.

3 Product Overview

3.1 View of the inverter

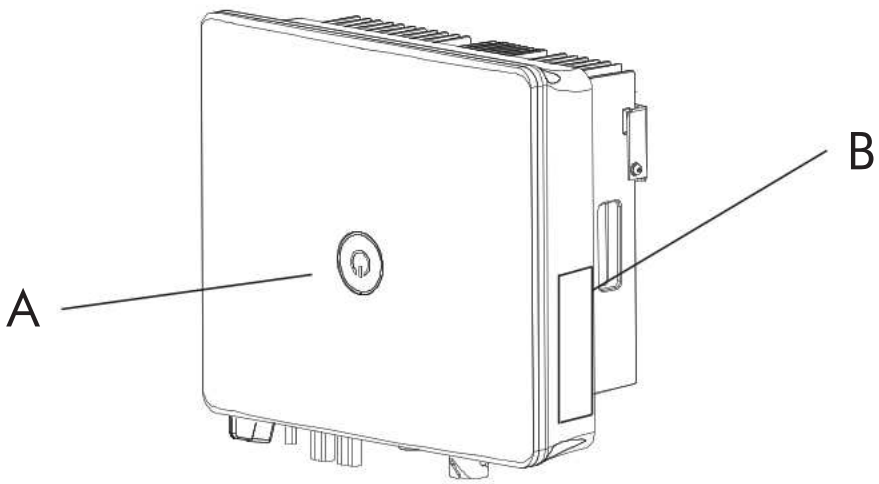

View the GT1 2.5-10kW series grid-tied inverter

Position	Designation
A	LED indicator
B	Label

3.2 Dimension

GT1 2.5~10KW SERIES GRID-TIED INVERTER HAS TWO EXTERNAL DIMENSIONS.

GT1 2.5~6.0KW SERIES GRID-TIED INVERTER：

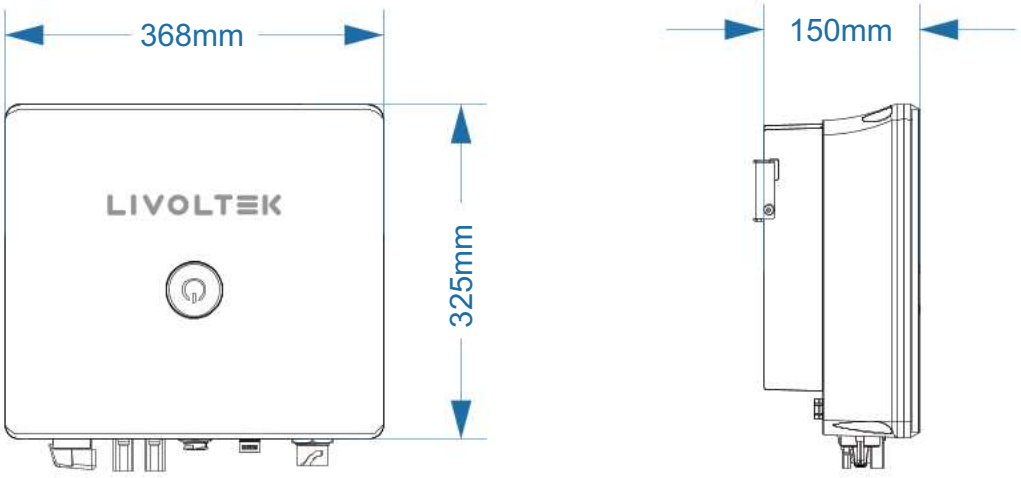

GT1 7~10KW SERIES GRID-TIED INVERTER：

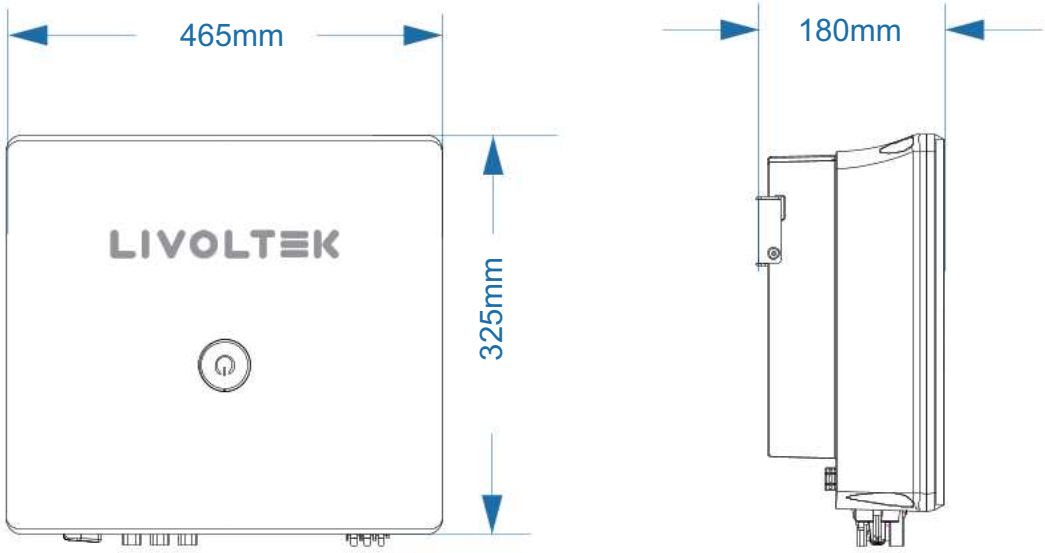

3.3 Terminals of the inverter

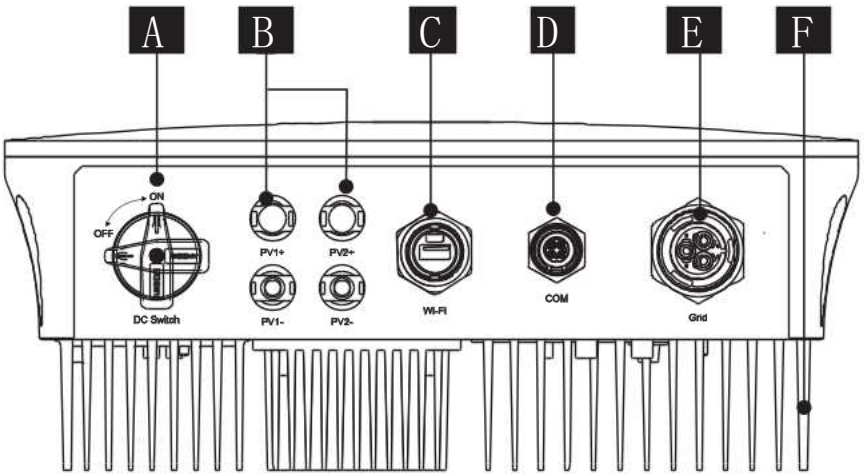

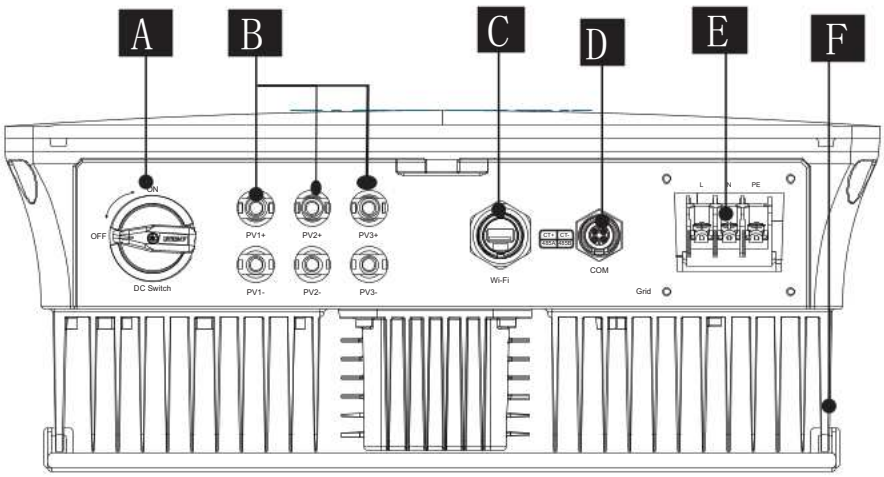

A	DC switch
B	PV connection
C	Wi-Fi port
D	COM port (Meter)
E	Grid output port
F	Earth port

3.4 System Diagram

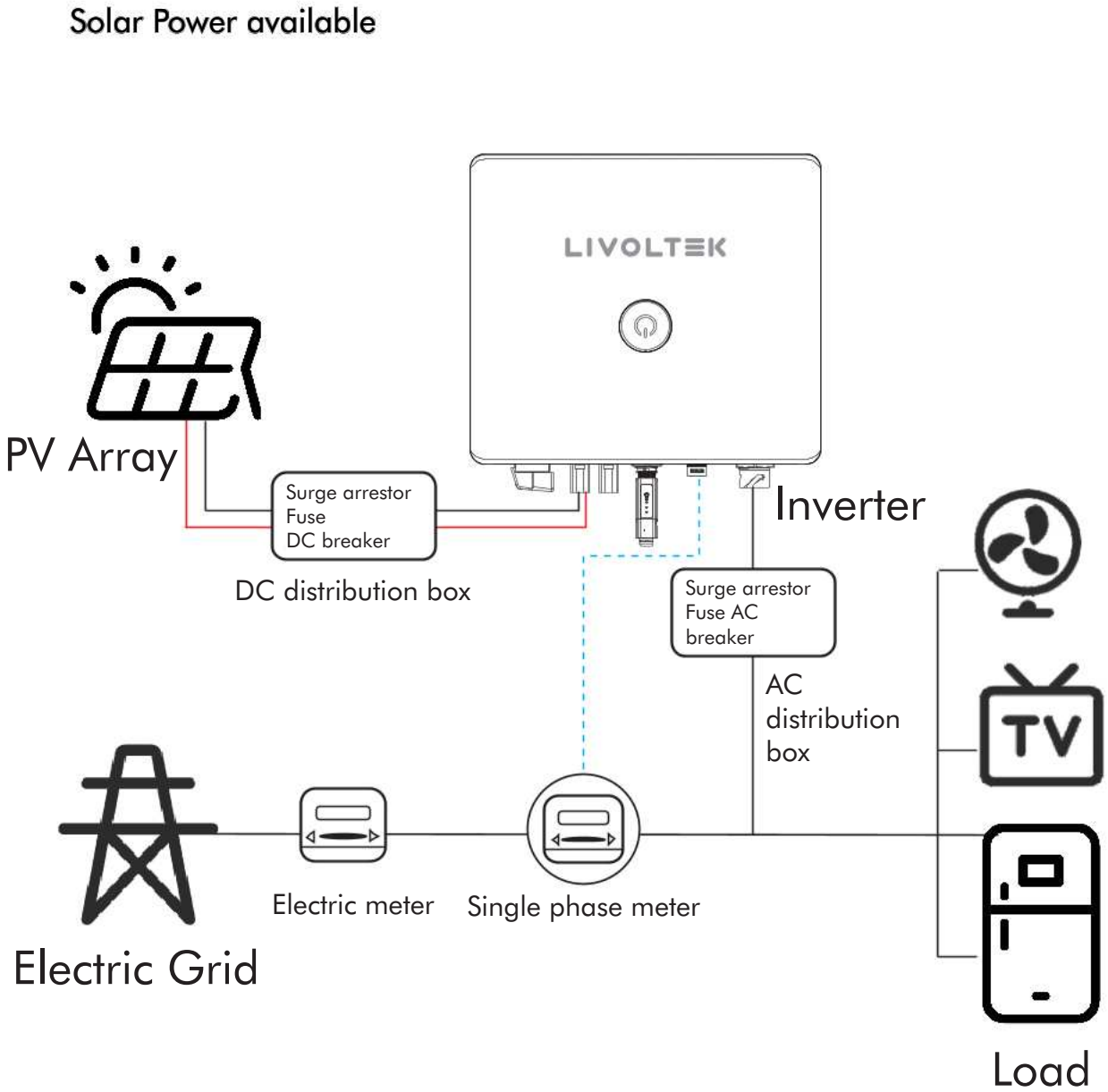

4 Scope of Delivery

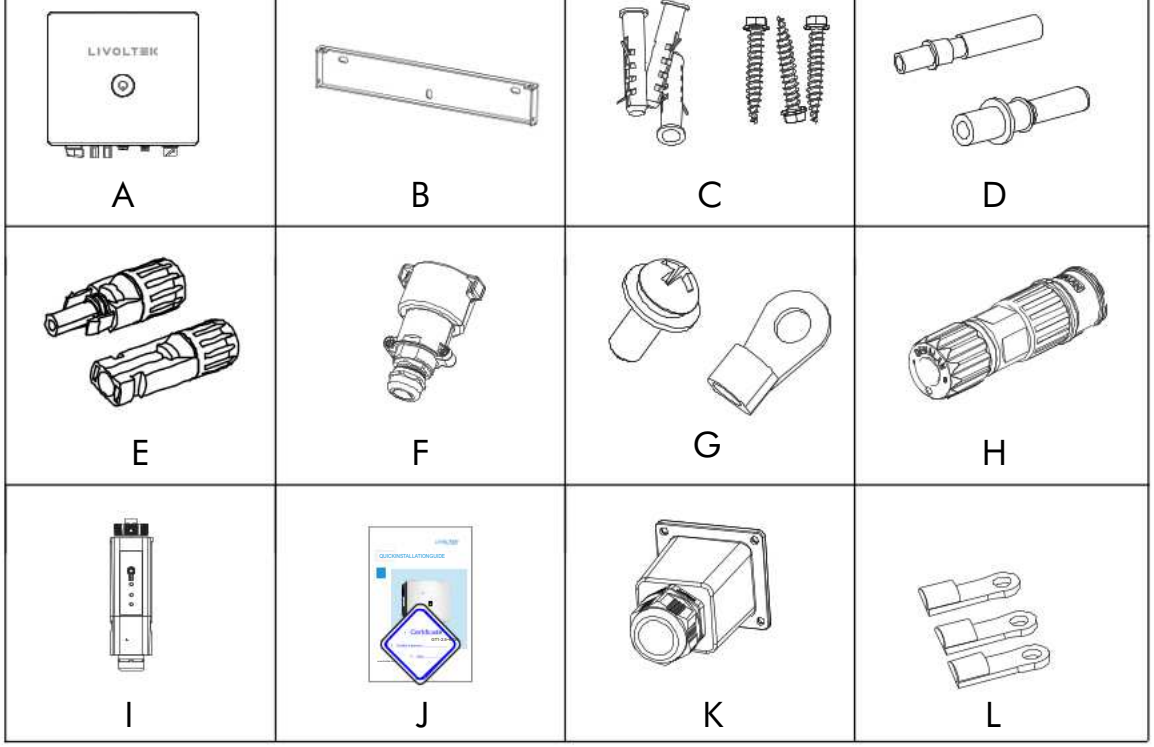

Item	QTY	Designation
A	1	Inverter
B	1	Bracket
C	3	Expansion screws for fixing mounting bracket
D	2/3	PV pin angle(positive*2/3 , negative*2/3)
E	2/3	PV terminal(positive*2/3 , negative*2/3)
F	1	Grid termina (only apply to GT1-2.5~6kW)
G	1	M5 Screw for fixing the inverter /Earth screw
H	1	Communicationterminal
I	1	Wi-Fi
J	2	Certificatecard /Quick installation guide
K	1	Waterproof Cover(only apply to GT1-7~10kW)
L	3	O-shaped terminal(only apply to GT1 7.0~10.0kW)

5 Mechanical Mounting

5.1 Requirements for Mounting

NOTICE

- Make sure there is no electrical connection before installation.
- In order to avoid electric shock or other injury, make sure that holes will not be drilled over any electricity or plumbing installations.
- Always follow the instructions when moving and positioning the inverter.
- Improper operation may cause injuries or serious wounds. In the case of poor ventilation, the system performance may compromise.

5.1.1 Location Requirements

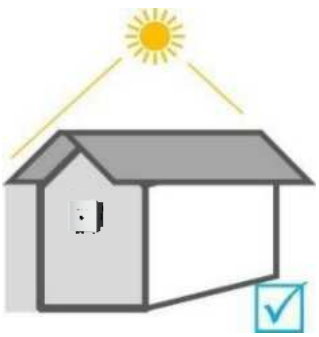

No direct sunlight



No rain exposure



No snow layu p

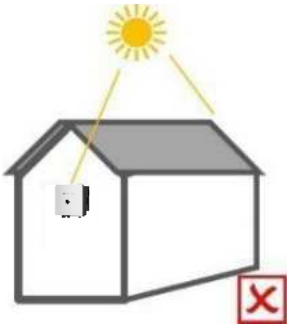

Direct sunlight

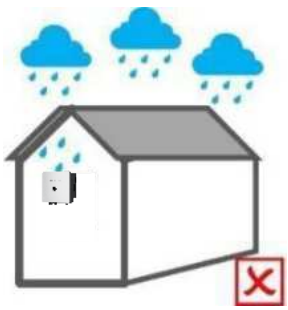

Rain exposure



Snow lay up

Select an optimal mounting location for safe operation, long service life and expected performance. During the installation and operation process, please the inverter in don't install the inverter where people may touch it's casing and radiator, because these parts will be very hot during operation.

5.1.2 Environment Requirements

The inverter must be installed in a ventilated environment to ensure good heat dissipation. Make sure the installation site meets the following conditions:

- Not in areas where highly flammable materials are stored.
- Not in potential explosive areas.
- Not in the cool air directly.
- Not near the television antenna or antenna cable.
- Not higher than altitude of about 4000m above sea level.
- Not in environment of precipitation or humidity ≯ 95%).
- Under good ventilation condition.
- The ambient temperature in the range of -30℃ to +60℃.
- The slope of the wall should be within± 5°.
- The wall hanging the inverter should meet conditions below:
- The wall must be solid enough to bear the weight of the inverter.
- Do not install the inverter on a wall made of gypsum boards or similar materials with weak sound insulation to avoid noise disturbance in a residential area.

5.1.3 Angle and Space Requirements

NOTICE

Never install the inverter horizontally, or with a forward tilt or with a backward tilt or even with upside down. The horizontal installation can result in damage to the inverter. Install the inverter upright or at a maximum back tilt of 15 degrees to facilitate heat dissipation.

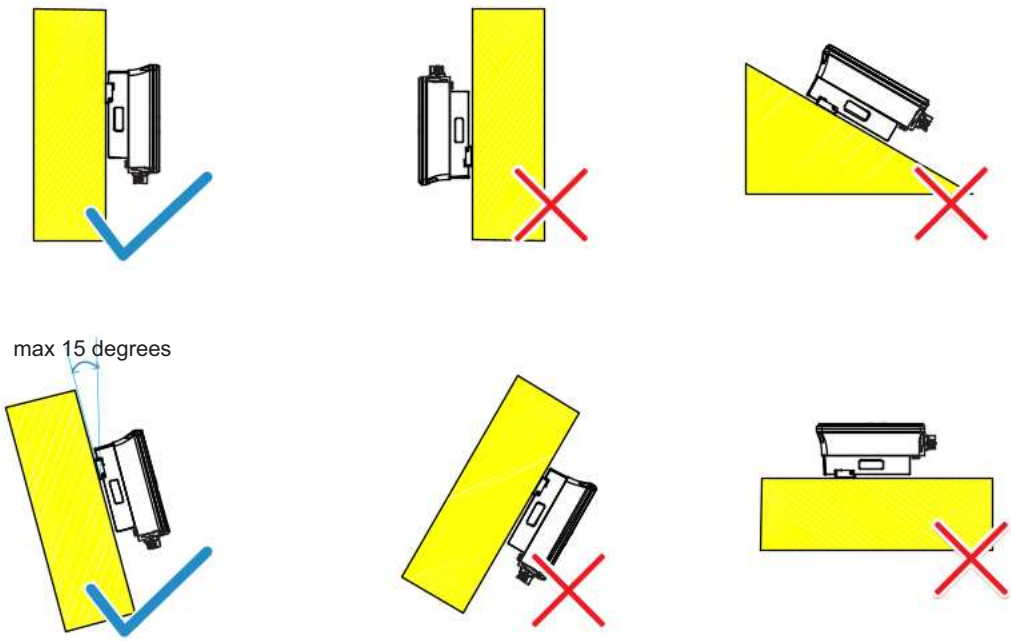

Reserve enough space when installing inverter (at least 300mm) for heat dissipation.

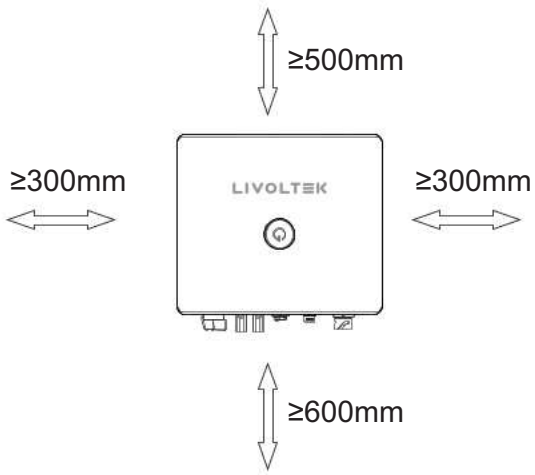

Reserved space dimensions of installation

Position	Min Distance
Left	300mm
Right	300mm
Up	500mm
Down	600mm
Forward	500mm

The distance of installation space for multiple inverter is as follows:

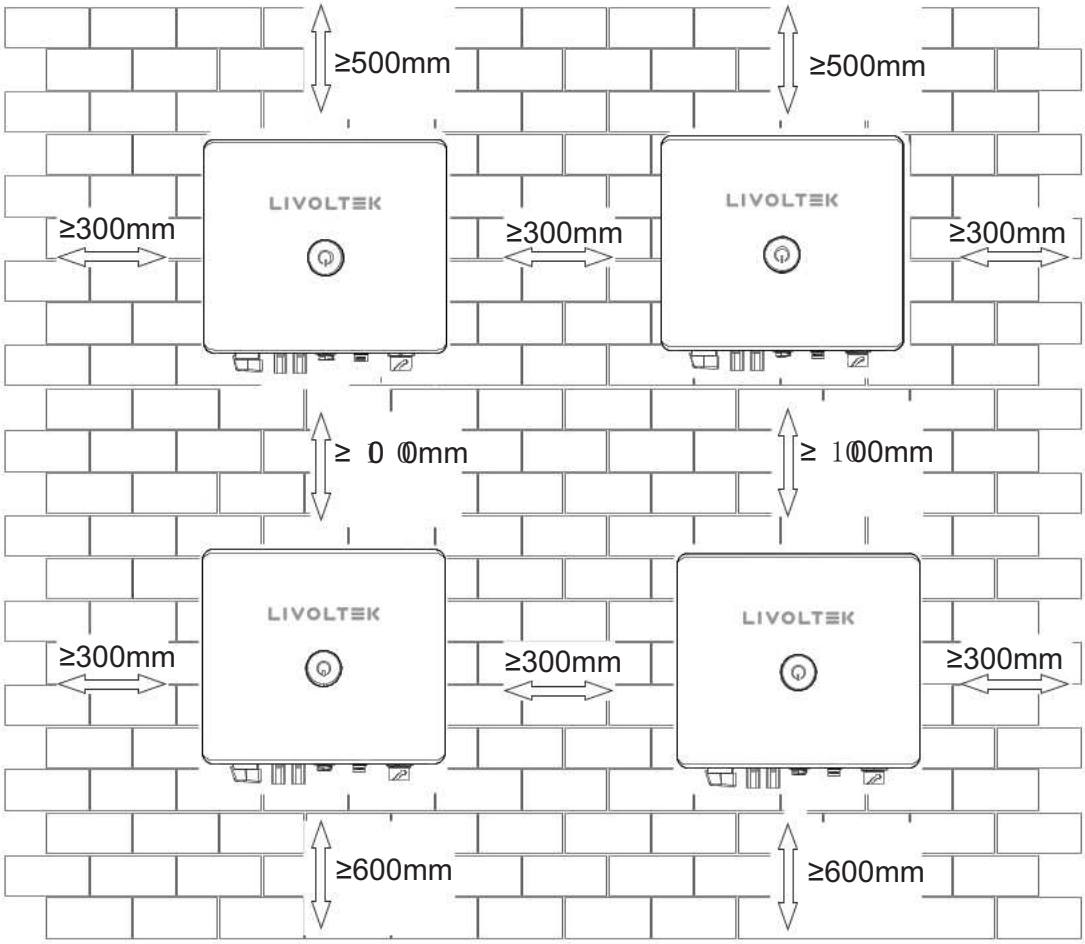

5.2 Mounting Instructions

Installation Tools (recommended but not limited to the following ones): Protective glasses and gloves, Marker, Measuring tape, Multi-meter, Wire crimper, Stripping pliers, Screwdriver, Manual wrench, Hammer drill and drill bit, etc.

 Bit Φ10 Hammer drill	 Rubber hammer	 Tape ruler	 Marker
 Protective glasses	 Dustproof Cover	 OT terminals press clamp	 Wire stripper
 DC Voltage (Range ≥1100V DC) Multimeter	 Euro terminal crimping tool	 Diagonalpliers	 Spirit level

Mounting the Inverter

Step1: Drill holes on the wall

- Locate the appropriate drilling holes and mark it with a marker pen.
- Drill holes with driller, make sure the holes are deep enough (at least 50mm) to support the inverter.

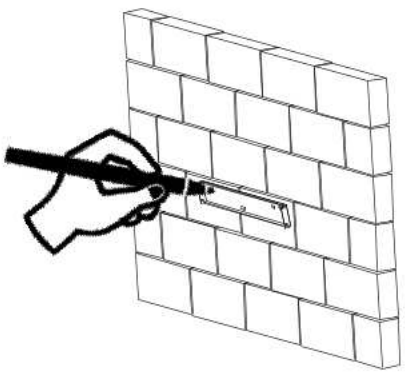

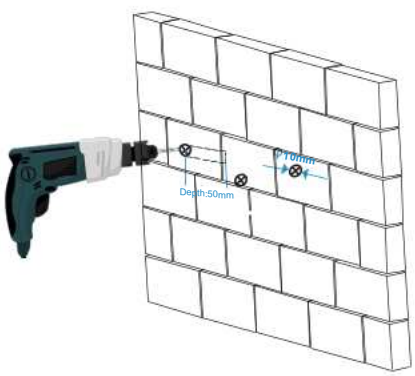

Step 2: Install the inverter to the wall

Insert the expansion tubes into the holes and hang the back plate, Then tighten the screws to install it.

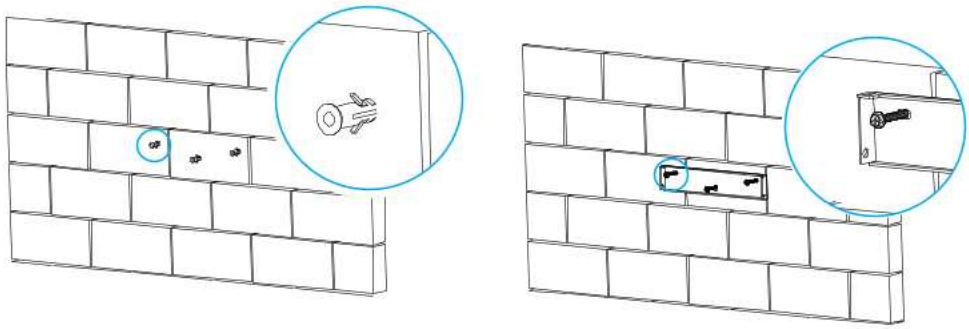

Step 3: Installation Self-check

Hang the inverter on the back panel and lock the side with screws. (torque: 1.5N·m)

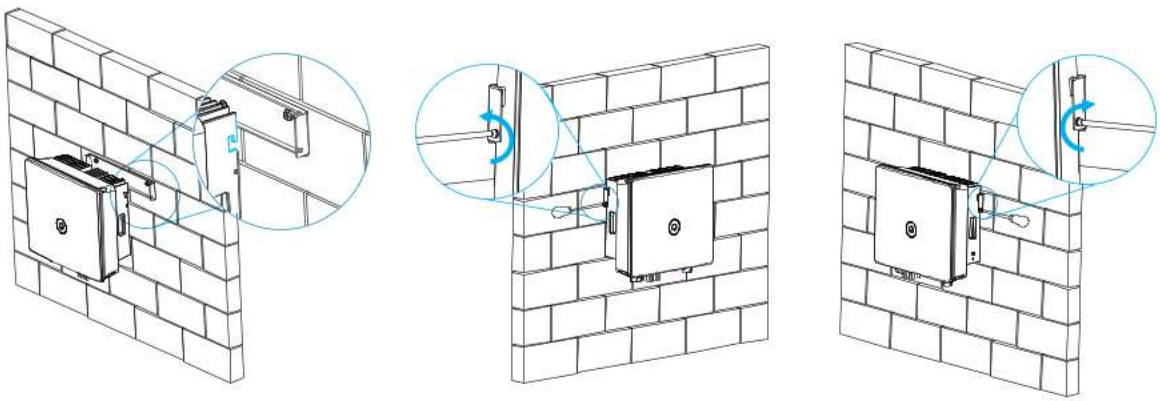

Step 4: Electrical Connection

Please refer to the operating instructions in the next chapter.

6 Electrical Connection

This chapter mainly describes the cable connections of the system. Prior to any electrical connections, keep in mind that the inverter has dual power supplies. It is mandatory for the qualified personnel to wear personal protective equipments (PPE) during the electrical work.

⚠ DANGER

Danger to life due to a high voltage inside the inverter!

• The PV string will generate lethal high voltage when exposed to sunlight.

• Before starting electrical connections, disconnect the DC and AC circuit breakers and prevent them from inadvertent reconnection.

• Ensure that all cables are voltage free before performing cable connection.

⚠ WARNING

• Any improper operations during cable connection can cause device damage or personal injury.

• Only qualified personnel can perform cable connection.

• All cables must be firmly attached, undamaged, properly insulated and adequately dimensioned.

NOTICE

• Comply with the safety instructions related to the PV strings and the regulations related to the utility grid.

• All electrical connections must be inaccordance with local and national standards.

6.1 PV Connection

Please only use the PV connectors from the accessory box for connection.
Before connecting, please make sure:

- The voltage, current and power ratings of the panels to be connected within the allowable range of the inverter. Ensure polarity is correct. Please refer to the Technical Data in chapter 9 for voltage and current limits.
- Since the inverter is transformerless, please do not ground either output of the PV panels. Ground the panel frames.
- Before connecting to PV modules, please install separately a DC circuit breaker between inverter and PV modules.
- To avoid any malfunction, do not connect any PV modules with possible current leakage to the inverter. For example, grounded PV modules will cause current leakage to the inverter. When using CIGS modules, please be sure NO grounding.
- If the inverter is equipped with a three-level lightning protection device, It's requested to use PV junction box with surge protection. Otherwise, it will cause damage on inverter when lightning occurs on PV modules.

Procedure

Model	Wire Size	Cable
2.5~6.0kW	10AWG	4-6m²
7.0~10.0kW	10AWG	4-6m²

⚠ WARNING

- Use IEC61730 class-A Rating PV modules.
- When exposed to light, PV panels will generate DC voltage.
- Turn off the DC circuit breaker before connecting any wiring.
- All wiring must be performed by a qualified personnel.
- It's very important for system safe ty and efficient operation to use appropriate cable for PV module connection. To reduce risk of injury, please use the proper recommended cable size as below

⚠ WARNING

- This unit is not provided with a GFDI device. This inverter controller must be used with an external GFDI device as required by the article 690 of the National Electrical Code for the installation location.

Wiring Connection

Please follow below steps to implement PV module connection:

Step1: Remove an appropriate length of the insulation layer from the positive and negative power cables using a wire stripper.

Step2. Insert the exposed areas of th e positive and negative power cables into the metal terminals of the positive and negative connectors respectively and crimp them using a crimping tool.

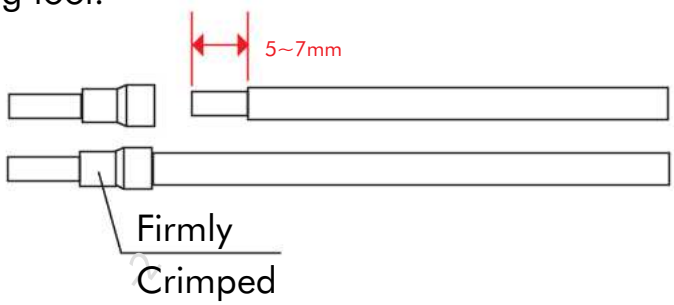

Step 3. Tighten the PV pin needle and the wiring harness to make the connection tight without looseness

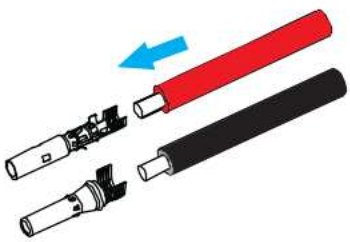

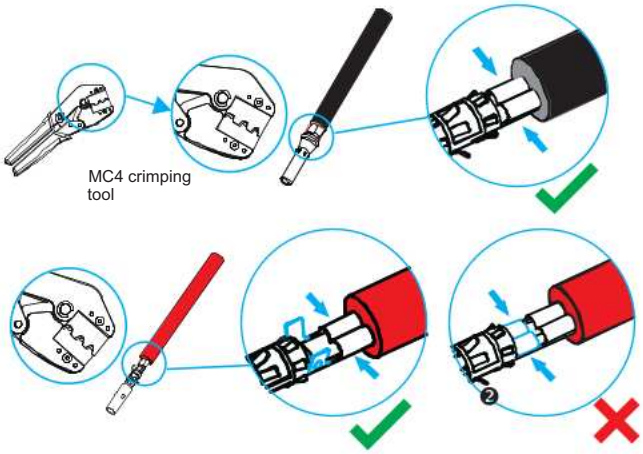

Step 4. The PV joint is divided into 2 parts - the plug and the fastening head. Insert the cable through the fastening head and the opposite plug.
Note：that the red and black lines correspond to differentof plugs. Finally, force the cable pair into the plug, will a "click" sound, which indicates that the connection is complete.



Step 5. Tighten the fastening head and into insert the corresponding positive and negative (PV-/PV+) ports of the inverter,and Measure the PV+/PV-voltage(＜600V) .



Step 6. Check correct polarity of wire connection from PV modules and PV input connectors. Then, connect positive pole (+) of connection wire to positive pole (+) of PV input connector. Connect negative pole (-) of connection wire to negative pole (-) of PV input connector.

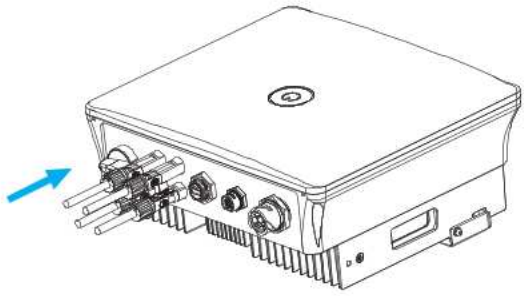

6.2 Grid Output Connection

⚠ WARNING

- The grid voltage and frequency must be in the permissible range.
- An external AC breaker must be installed between inverter and Grid input power source.
  This will ensure the inverter can be securely disconnected during maintenance and fully protected from over current of Grid input.
- All wiring must be performed by a qualified personnel.
- Before making Grid input/output connection, be sure to open DC protector or disconnection first.
- Disconnect the circuit breaker and secure it against reconnection.

Take out the Grid connector parts from the packaging. And ensure the information below before connecting the inverter to the grid:

Suggested cable requirement for Grid wires

It's very important for system safety and efficient operation to use appropriate cable for Grid input connection. To reduce risk of injury, please use the proper recommended cable size as below.

Procedure:

Model	Wire Size	Cable	Breaker	Torque Valu (max)
GT1-2.5 ~6.0kW	8AWG	4-6 mm²	32A	1.2N· m
GT1-7~8kW	8AWG	8-10mm²	40A	1.5N • m
GT1-9~10kW	8AWG	8-10mm²	60A	1.5N • m

GT1-2.5~6kW Grid connection:

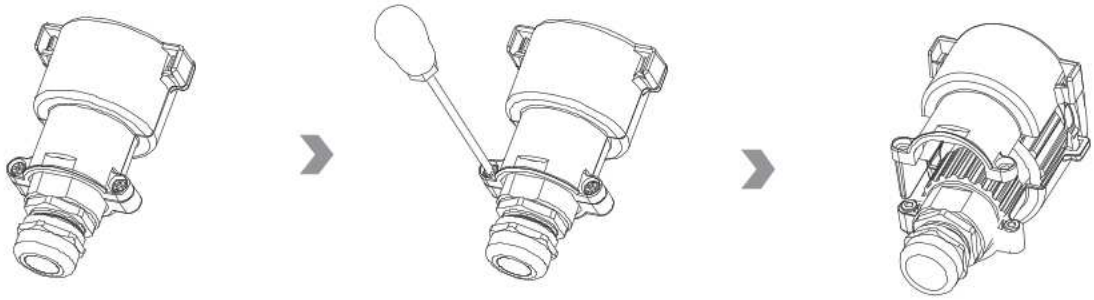

Step1: Assembling the Grid Connector .

- ①Remove the cable jacket by 50~60mm.
- ②Strip the wire insulation by 5 .~7 mm

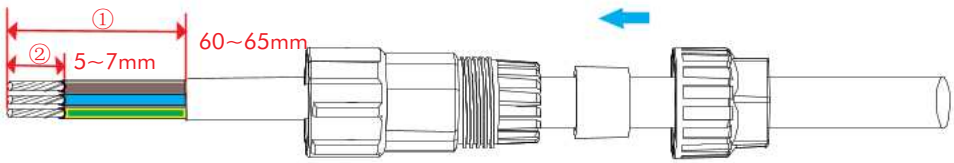

Step 2: Installing the Grid Connector

Note: The place where the device needs to be fastened during installation needs to hear “click” sound to confirm that it is locked.

- Insert the corresponding L/N/PE and use the matching tools to lock it, then tighten the threaded sleeve (torque:0.8N· m))

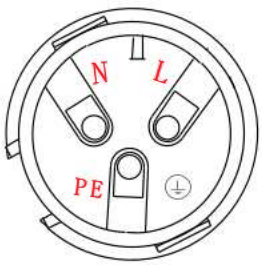

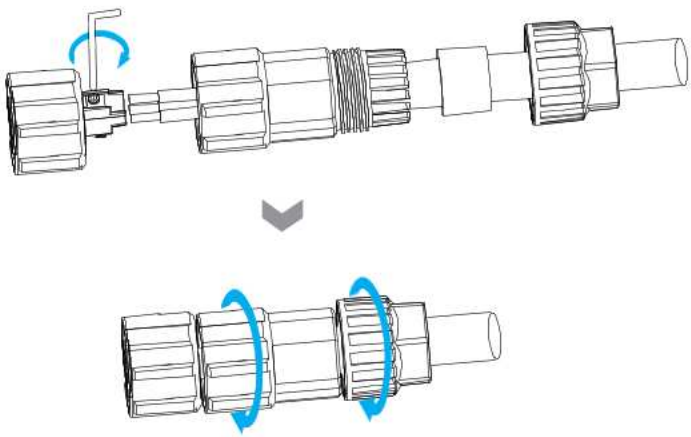

- Finally, insert it into the Grid port on the bottom frame of the inverter, and tighten it.

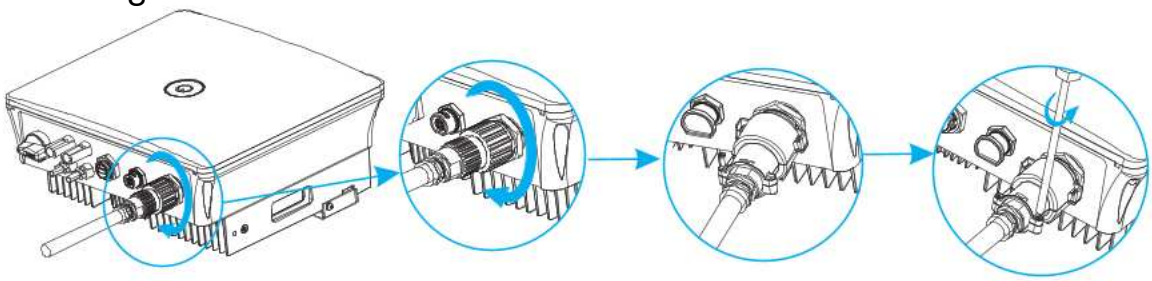

GT1-7.0~10.0kW series PV connection are as follows:

Step1:First pull out waterproof plug of the Grid Cover.
Step2:And pass the Grid harness through the Grid cover.

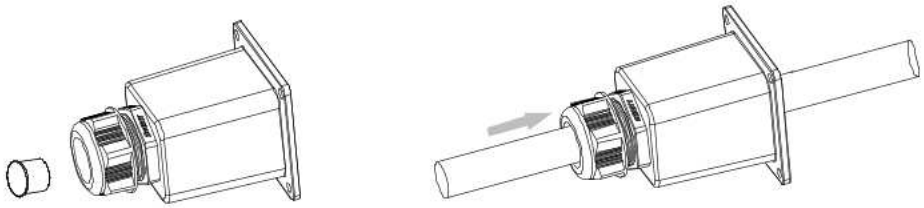

Step3: Remove the cable jacket and strip 60~65mm, And strip wire insulation by 7-10mm.

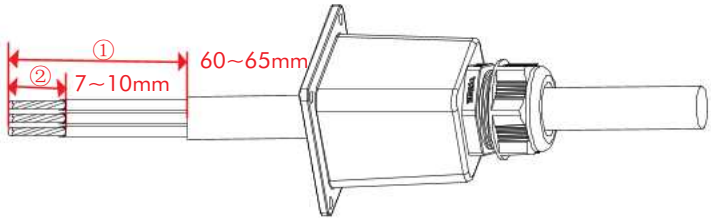

Pull cables outward to check whether they are firmly installed

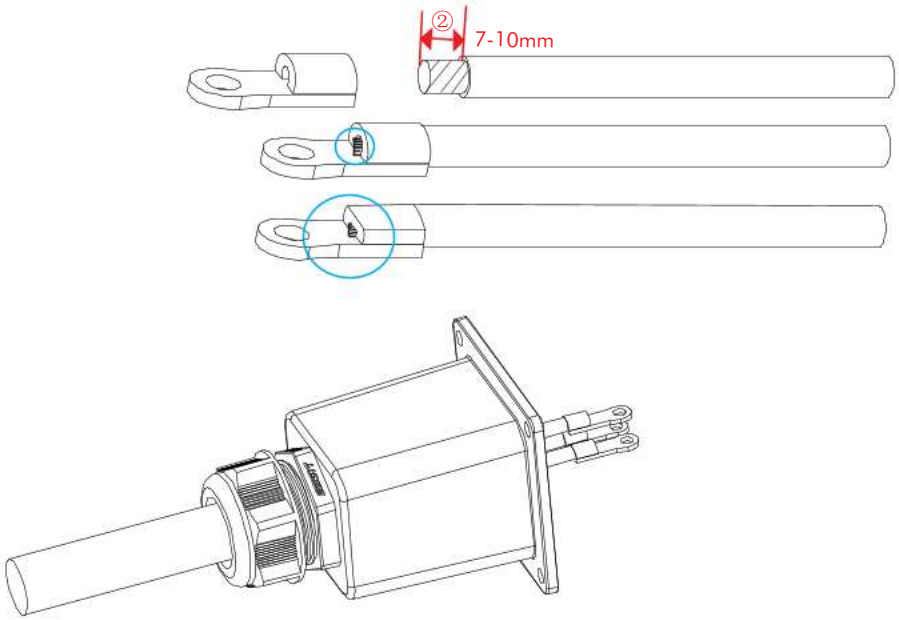

Step5: Tighten the L/N/PE screws of Grid respectively, and then fasten Grid Cover. (torque:1.5N • m ）

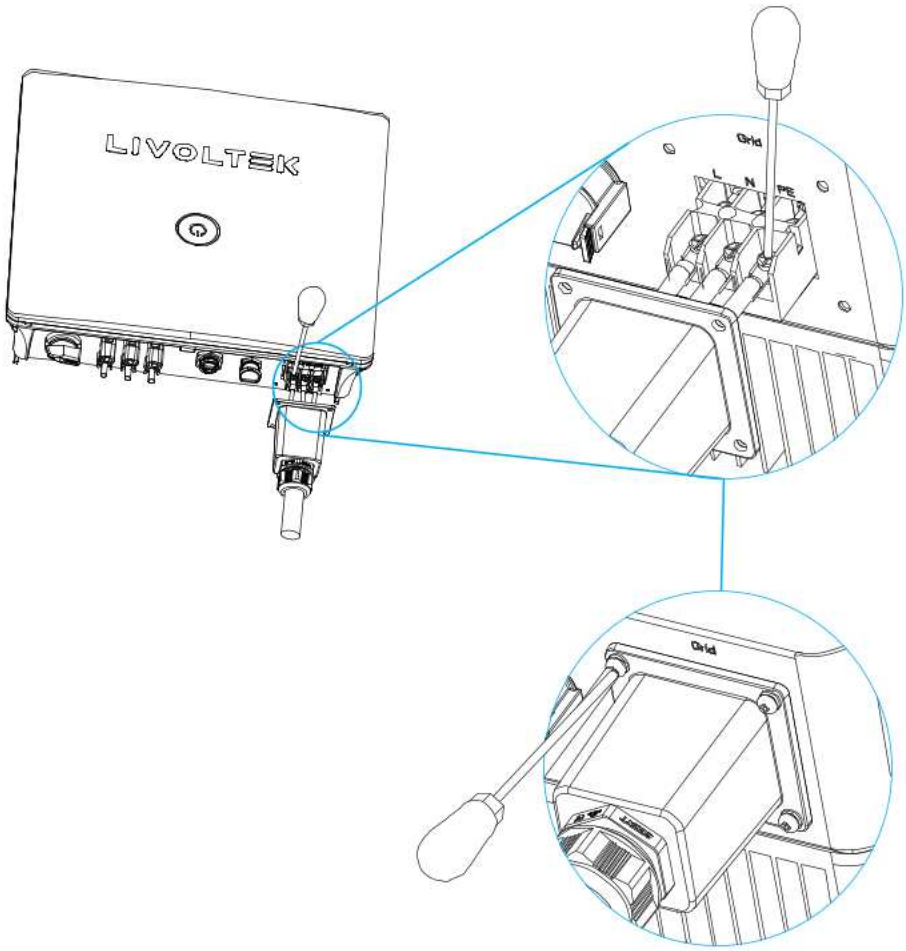

6.3 Communication Connection (Optional)

GT1 2.5~10kW series grid-tied inverters should work with Smart meter to monitor household electricity consumption and limit the inverter's output power to the mains. In addition, the Smart meter can transmit the relevant electricity consumption data to the inverter or plat form, which is convenient for users to read at any time.

Please note that the Smart meter brand required by Livoltek must be used.

Meter connection diagram:

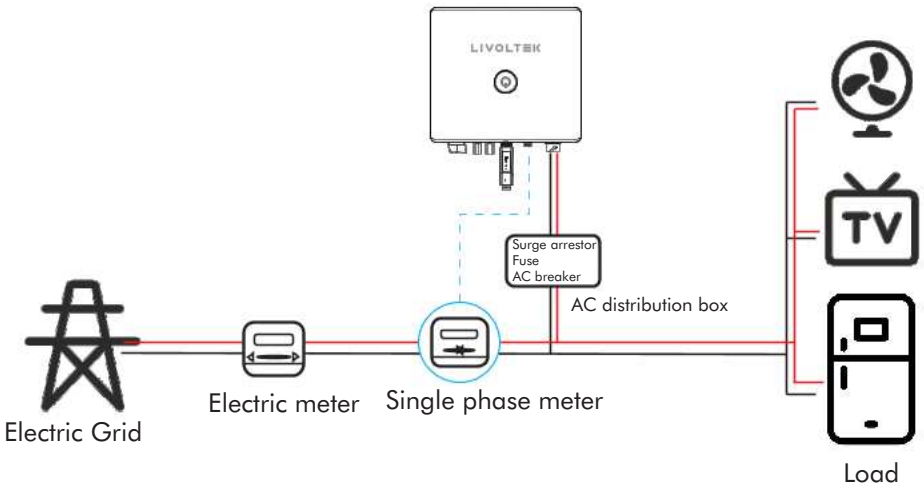

Step 1: Make communication cables.



Step 2: Thread the cable through the COM terminal head and waterproof plug.

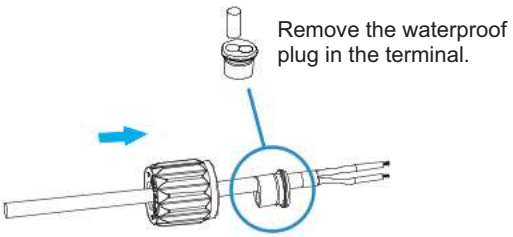

Step 3: Insert wire locking screw. (torque:0.8N·m)

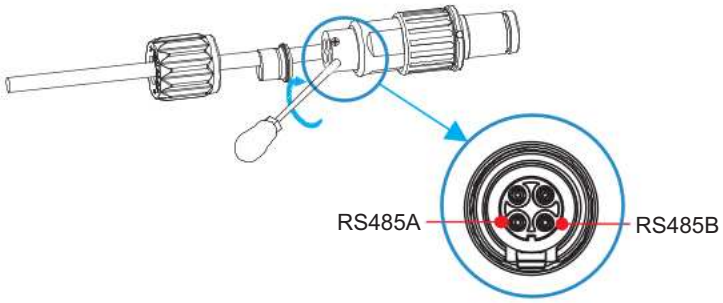

Step 4: Correspondingly insert the COM port, tighten it. (torque:1.2N·m)

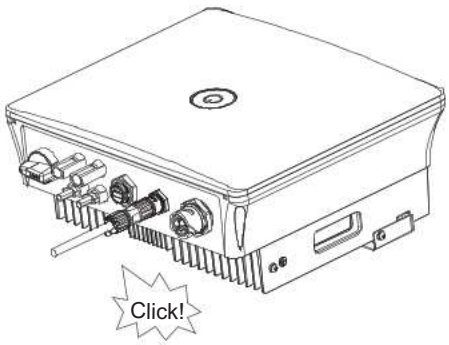

6.4 Earth connection(mandatory requirement)

⚠ WARNING

- Earth connection essential before connecting supply
- Be sure that AC power source is disconnected before attempting to hardwire it to the unit.

NOTICE

- Good grounding is good for resistance to surge voltage shocks and improves EMI performance. Therefor,before connecting AC，DC and communication cables, you need to ground the wires.
- For a single inverter, simply ground the PE cable; For multi-inverter, the PE cables for all inverters need to connected to the same grounded copper strip to ensure an equipotential connection.
- If the PV end of the inverter is not connected with earth, the inverter will turn on a red light inspect and report Earth Fault. this inverter complies with IEC 62109-1 clause 13.9 for earth fault alarm monitoring

Procedure:

Model	Wire Size	Cable	Torque Valu (max)
2.5~10kW	10AWG	4-6²mm	1.5N· m

Step1: ①prepare a one-core wire, strip it 5-7mm and crimp the incoming Earth terminal;
②Pass through the Heat-shrink tube;
③Pass through the Ground terminal;
④Crimping terminal;
⑤On Heat-shrink tube,tighten it;

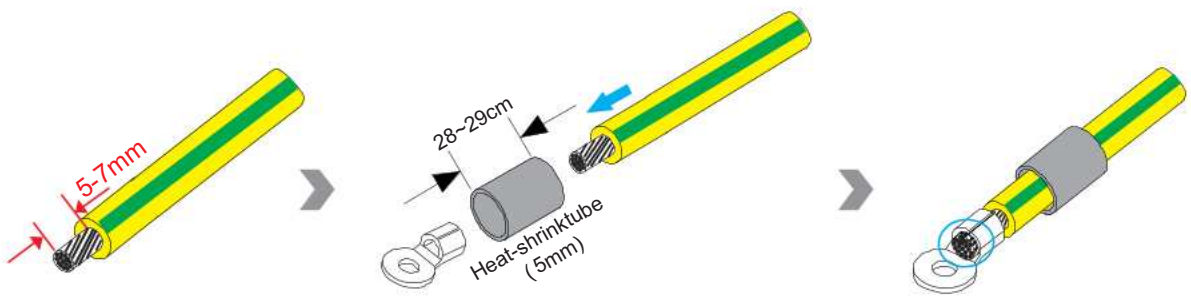

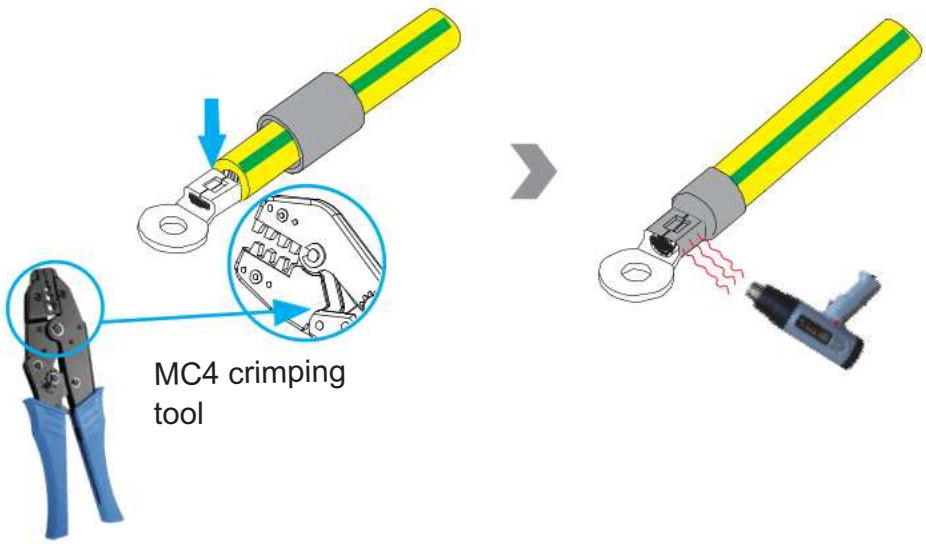

Step2：Use screws to fasten on the inverter; (torque:1.5±0.2N·m)

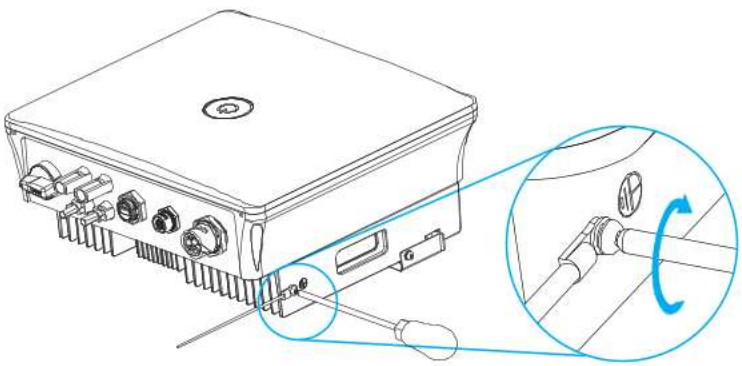

6.5 Wi-Fi Connection

The inverter provides a Monitoring module port, which can transmit data of the inverter to the monitoring website via Wi-Fi. (If necessary, purchase products from Livoltek)

Monitoring module connection diagram:

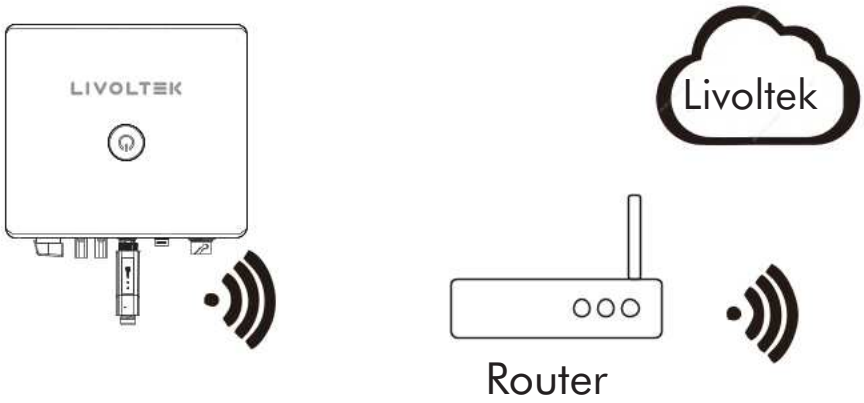

Wi-Fi module implements communication with Cloud server through wireless or ethernet network to monitor inverter's data status. For more details, refer to Wi-Fi Product Application Manual.

Sept 1: Disassemble Livoltek's Wi-Fi accessories, and open the waterproof plug of the Wi-Fi port on the inverter;

Step 2: Install the Wi-Fi module at the corresponding position in the inverter, and buckle tightly, you mainly need to hear a "click";

Please go to the Livoltek APP to connect to the Internet and set it up. For specific details, please refer to the Wi-Fi user manual.

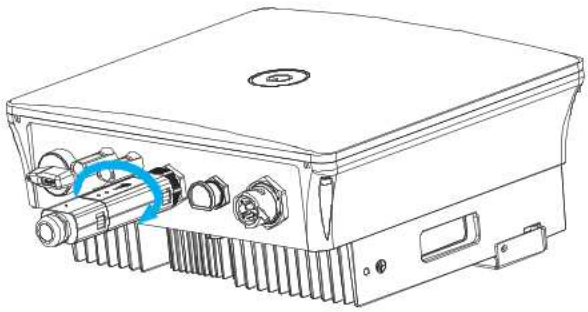

6.6 AFCI (Optional)

Arc-Fault circuit interrupter (AFCI) refers to a photovoltaic module or cable that is not properly connected or damaged, and may produce an arc. According to UL 1699B:2018, the inverter has an arc detection and interrupt identification system, which produces an arc situation, and the inverter must trip within the specified time, and can only be manually reset to ensure the safety of the user's life and property. GT1 series inverter this function is turned on by default, if you do not need this function, you can log on to the Livoltek APP, cloud platform and AP to turn off.
(go to the "Advanced Settings" interface, select "AFCI function> Setting >Disable")

6.6.1 AFCI fault alarm cleared

⚠ Warning

- If an arc fault error occurs, follow the steps below to troubleshoot the AFCI fault and restart the inverter.
- Do not turn off AFCI permanently.

GT1 series has an automatic clearance mechanism for AFCI alarms. If an alarm is triggered less than 4 times in a 24-hour period and lasts less than 5 minutes, the inverter will automatically clear the alarm. If more than 5 consecutive alarms are triggered within 24 hours, the GT1 series inverter lock protection. Manual intervention is required to manually clear the alarm and restore the normal operation of the inverter.

When "AFCI Fault" is prompted, an arc has occurred in the PV system. The inverter will trip and shut down.

When "AFCI self-test fault" is prompted, an arc occurs in the PV system self-test. Inverter retest start.

How do I manually remove alarms?

Method 1: Livoltek App / Livoltek Cloud Platform/ AP.

Log in to the Livoltek app /Livoltek cloud platform/ AP, the main menu enters the "Settings > Advanced Settings"interface, click "Restart".



Method 2: Put the DC and AC switches of the inverter in the "OFF" position. Wait for the screen to turn off.

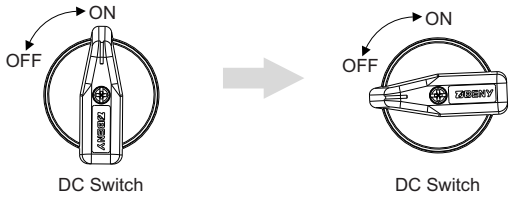

Check the wiring of the PV assembly, if there is a switch in the front stage of the PV, you need to check whether the switch wiring is abnormal.

After troubleshooting, reboot the inverter and place the DC and AC switches in the"ON" position.

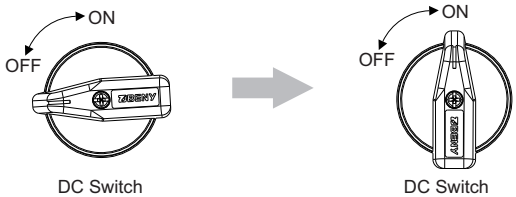

Remark

- If the system fault display is not eliminated, please contact customer service;
- After the circuit breaker or open and close between the inverter and the power grid, the inverter will start the countdown self-test, and the self-test will jump out "AFCI self-test..." After the self-test is normal, it can be connected to the power grid.

6.7 Installation Verification

Check the following items after the inverter is installed.

- No other objects put on the inverter.
- All screws especially the screws used for electrical connections are tightened.
- The inverter is installed correctly and securely.
- Ground, AC, DC and Communications cables are connected tightly correctly and securely.
- Check there is no open circuit or short circuits at AC and DC terminals using multi-meter.
- Idle terminals are sealed.
- All safety warning symbols are intact and complete on the inverter.

7 System Operation

7.1Powering ON the Inverter

Step 1: Switch ON the DC and AC circuit breaker

Wait a few seconds and the inverter will start a self-test procedure when the indicator light flashes, when it is done successfully, the green led should be solid on and the graphical display should start displaying.

Step 2: Switch on the loads



The load parameters should show. It is recommended to turn on one by one, to avoid triggering the protection action due to a large instantaneous impact when the load is turned on at the same time.

7.2 Powering OFF the Inverter

Step 1: Turn off the loads;

Step 2: Turn off the AC switch;

Step 3: Turn off the PV;

Step 4: Wait for at least 5 minutes after the LED and graphical display black out for the internal circuits to discharges energy;

Step 5: Disconnect all the power cables and communication cables if needed.

⚠ WARNING

After the inverter powers off the remaining electricity and heat may till cause electrical shock and body burns. Please only begin servicing the inverter ten minutes after the power-off.

7.3 LEDs and Graphical Display

The inverter operation status can be obtained from observing LED indicator status.



Logo	Color	Status	Description
	Green	On	The inverter is running normally
		Off	The inverter is not operating nomally
		blink	Standby
	Green/Red	Blink	System updating
	Red	On	Fault occurs
		Off	No fault occurs

8 Communication Mode Description

You can use the following communication modes to implement communication: Bluetooth and Wi-Fi, all of which are described as follows:

Check www.livoltek-portal.com for details operation and APP User Manual, APP User Manual is available for free from website.

Download and Install Livoltek APP

- Method 1: Go to Google Play or Apple App Store to search Livoltek, download and install the app.
- Method 2: Scan QR code pasted on the right side of the inverter or below to download and install Livoltek app.

My Livoltek

Distribution Network

Step 1: Open Livoltek APP, you can see the interface registration mode; (If You have registered, enter the account number and you can and local password to login)

Step 2: Select Wi-Fi mode;

Step 1:

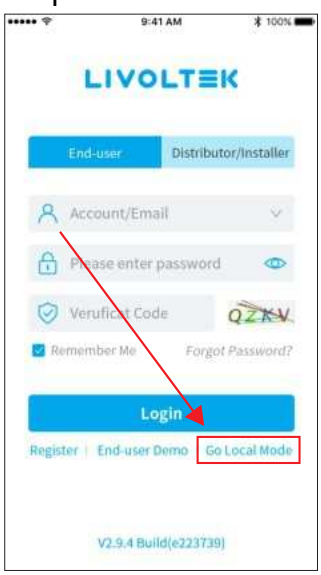

Step 2:

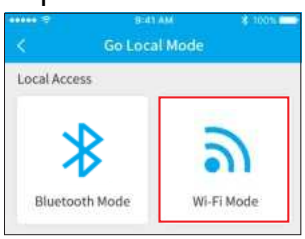

Step 3: Determine the address server, Then connect to home Wi-Fi and the Dongle Wi-Fi.

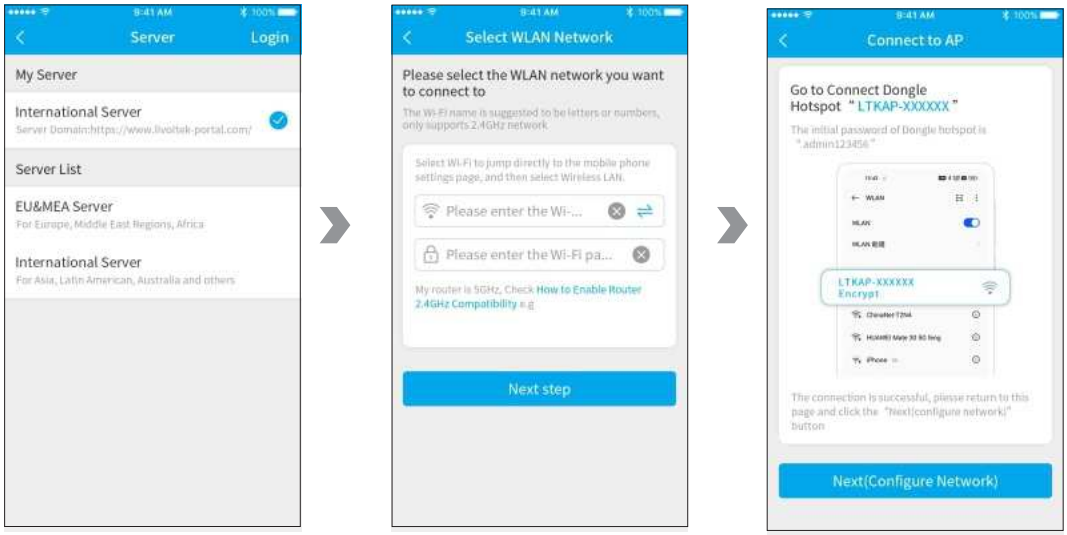

User Register

Registeranaccount, select the country, customer type, and fill in the account, Password and other related information.

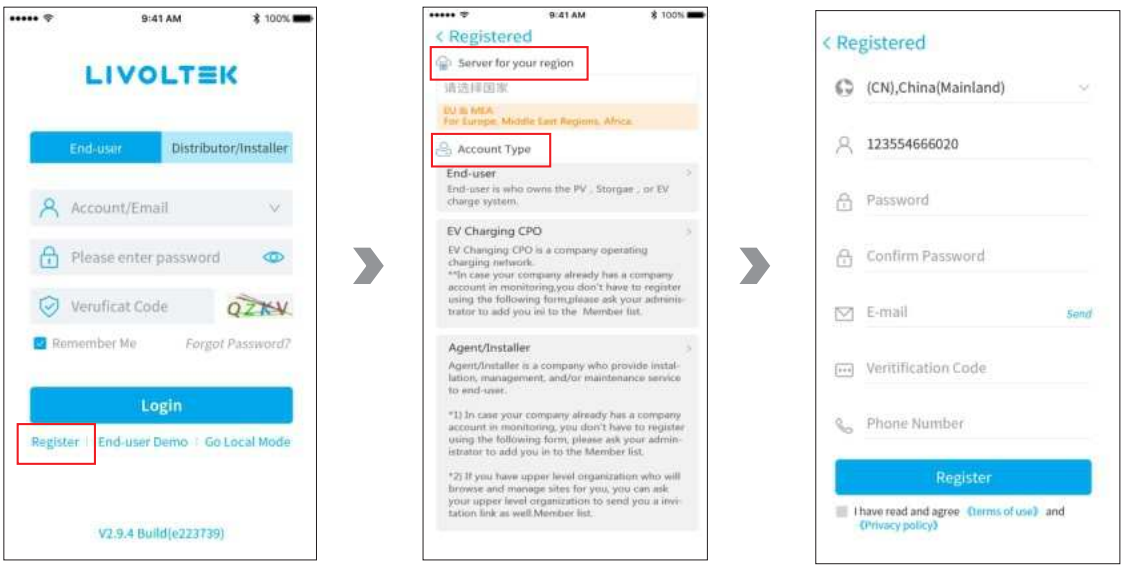

Create Site

Select account type, enter “Site Name”\”Choosw your region” eate a power station, and fill in the power station name, address and other related information. Then you can add to Site.

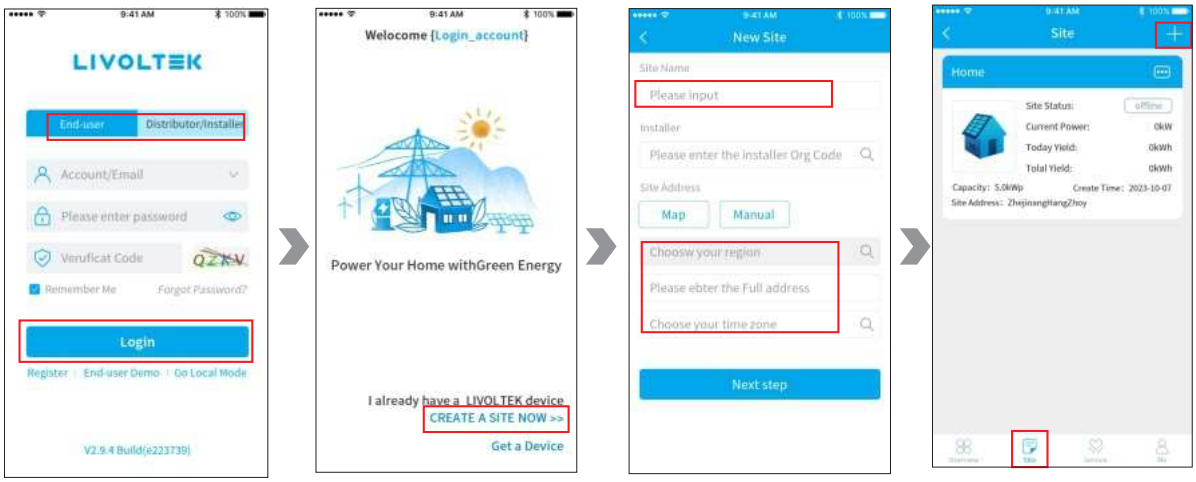

Add Device

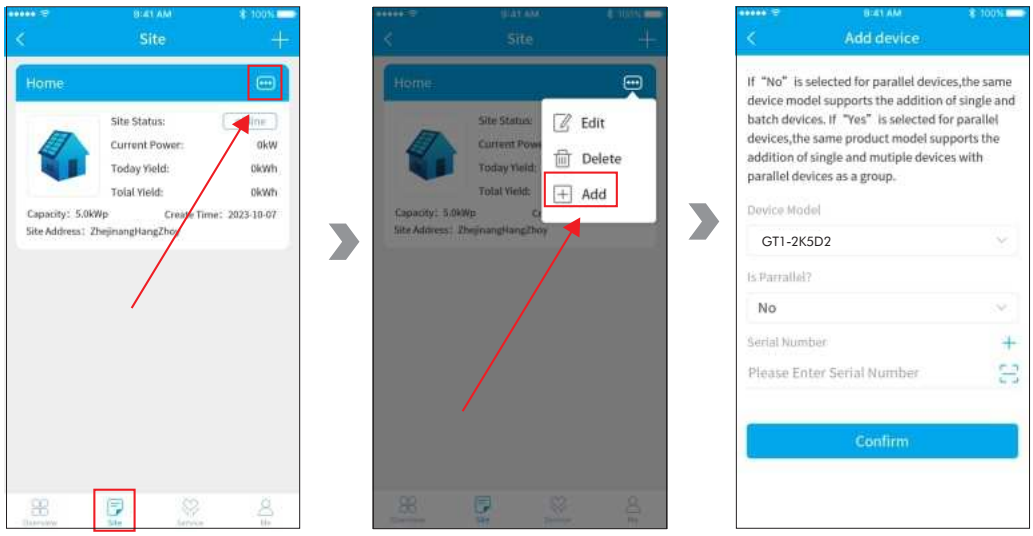



9 Troubleshooting

Error Message	Causes	Measures Recommended
Grid Over Volt Fault	Grid voltage is higher than permissible range or high voltage duration exceeds high voltage ride through setting.	Normally, the inverter will re-connect to the grid when the grid returns to normal. If the fault occurs repeatedly: 1. measure the actual grid voltage, if the grid voltage is really higher than the set value, please contact the local electric power company to seek a solution; 2. Check the protection parameter setting through APP or WEB, and modify the over-voltage protection value with the consent of local power operator; 3. If you confirm that the fault is not caused by the above reasons and still exists, please contact LIVOLTEK's customer service centre.
Grid Inst Volt High Fault	Grid voltage is higher than permissible range or high voltage duration exceeds high voltage ride through setting.	Normally, the inverter will re-connect to the grid when the grid returns to normal. If the fault occurs repeatedly: 1. measure the actual grid voltage, if the grid voltage is really higher than the set value, please contact the local electric power company to seek a solution; 2. Check the protection parameter setting through APP or WEB, and modify the over-voltage protection value with the consent of local power operator; 3. If you confirm that the fault is not caused by the above reasons and still exists, please contact LIVOLTEK's customer service centre.
AC overcurrent instantaneous	1. Abnormal internal system modules 2. System related wiring or terminals are abnormal	1.Wait for the system to return to normal 2.Disconnect the AC side switch and DC switch, if there is a battery, you need to disconnect the battery side switch, wait for 15 minutes and then close the AC and DC switches in turn, restart the system, if the fault still exists, please contact LIVOLTEK customer service centre.
Grid Over Freq Fault	Grid frequency is higher than permissible range.	Normally, the inverter will re-connect to the grid when the grid returns to normal. If the fault occurs repeatedly: 1. Measure the actual grid frequency, if the grid frequency is indeed out of the set range, please contact your local power company for a solution; 2. Check whether the protection parameter setting meets the requirements through APP or WEB; 3. If you confirm that the fault is not caused by the above reasons and still exists, please contact LIVOLTEK's customer service centre.
Grid Under Freq Fault	Grid frequency is lower than permissible range.	Normally, the inverter will re-connect to the grid when the grid returns to normal. If the fault occurs repeatedly: 1. Measure the actual grid frequency, if the grid frequency is indeed out of the set range, please contact your local power company for a solution; 2. Check whether the protection parameter setting meets the requirements through APP or WEB; 3. If you confirm that the fault is not caused by the above reasons and still exists, please contact LIVOLTEK's customer service centre.
Grid power down	1. There is no power from the grid; 2. The AC line or AC switch is disconnected.	Normally, the inverter will re-connect to the grid when the grid returns to normal. If the fault occurs repeatedly: 1. Check the power grid is reliably supplied; 2. Check whether the AC wiring is tight; 3. check whether the AC cable is connected to the correct terminals (whether the fire wire is connected to the N wire inversely); 4. Check whether the AC circuit breaker is closed; 5. If you confirm that the fault is not caused by the above reasons and still exists, please contact LIVOLTEK's customer service centre.
DC component exceed standard	1. Abnormal internal system modules 2. System related wiring or terminals are abnormal	1.Wait for the system to return to normal 2.Disconnect the AC side switch and DC switch, if there is a battery, you need to disconnect the battery side switch, wait for 15 minutes and then close the AC and DC switches in turn, restart the system, if the fault still exists, please contact LIVOLTEK customer service centre.

Current leakage excess	The leakage current exceeds the permissible range.	1. Humid environment of the PV panel or bad light will lead to this fault, normally, the inverter will be re-connected to the grid after the environment is improved; 2. If the environment is normal, check whether the insulation of DC and AC cables is normal; 3. If you confirm that the fault is not caused by the above reasons
Grid abnomal	Self-test before Grid-connection	Normally, the inverter will re-connect to the grid when the grid returns to normal. If the fault occurs repeatedly: 1. measure the actual grid voltage, if the grid voltage is really higher than the set value, please contact the local electric power company to seek a solution; 2.If you confirm that the fault is not caused by the above reasons and still exists, please contact LIVOLTEK's customer service centre
Grid Volt Unbalan Fault	Inverter detects voltage imbalance between phases of the grid	Normally, the inverter will re-connect to the grid when the grid returns to normal. If the fault occurs repeatedly: 1. measure the actual grid voltage, if the grid voltage is really higher than the set value, please contact the local electric power company to seek a solution; 2. If the phase voltage difference of each phase is within the permissible range of the local power company, modify the grid voltage imbalance parameter via APP or WEB; 3. If you confirm that the fault is not caused by the above reasons
Grid Frequency consistence fault	1. Abnormal internal system modules 2. System related wiring or terminals are abnormal	1.Wait for the system to return to normal 2.Disconnect the AC side switch and DC switch, if there is a battery, you need to disconnect the battery side switch, wait for 15 minutes and then close the AC and DC switches in turn, restart the system, if the fault still exists, please contact LIVOLTEK customer service centre.
Grid protect self check fail	1. Abnormal internal system modules 2. System related wiring or terminals are abnormal	1.Wait for the system to return to normal 2.Disconnect the AC side switch and DC switch, if there is a battery, you need to disconnect the battery side switch, wait for 15 minutes and then close the AC and DC switches in turn, restart the system, if the fault still exists, please contact LIVOLTEK customer service centre.
Bypass overload fa	1. Abnormal internal system modules 2. System related wiring or terminals are abnormal	1.Wait for the system to return to normal 2.Disconnect the AC side switch and DC switch, if there is a battery, you need to disconnect the battery side switch, wait for 15 minutes and then close the AC and DC switches in turn, restart the system, if the fault still exists, please contact LIVOLTEK customer service centre.
Bus voltage instant over	1. Abnormal internal system modules 2. System related wiring or terminals are abnormal	1.Wait for the system to return to normal 2.Disconnect the AC side switch and DC switch, if there is a battery, you need to disconnect the battery side switch, wait for 15 minutes and then close the AC and DC switches in turn, restart the system, if the fault still exists, please contact LIVOLTEK customer service centre.
Bus Volt High	1. Abnormal internal system modules 2. System related wiring or terminals are abnormal	1.Wait for the system to return to normal 2.Disconnect the AC side switch and DC switch, if there is a battery, you need to disconnect the battery side switch, wait for 15 minutes and then close the AC and DC switches in turn, restart the system, if the fault still exists, please contact LIVOLTEK customer service centre.
PV1 over current	1. Abnormal internal system modules 2. System related wiring or terminals are abnormal	1.Wait for the system to return to normal 2.Disconnect the AC side switch and DC switch, if there is a battery, you need to disconnect the battery side switch, wait for 15 minutes and then close the AC and DC switches in turn, restart the system, if the fault still exists, please contact LIVOLTEK customer service centre.

	1. Abnormal internal system modules 2. System related wiring or terminals are abnormal	1.Wait for the system to return to normal 2.Disconnect the AC side switch and DC switch, if there is a battery, you need to disconnect the battery side switch, wait for 15 minutes and then close the AC and DC switches in turn, restart the system, if the fault still exists, please contact LIVOLTEK customer service centre.
PV1 reverse	PV positive and negative terminals reversed	1.Please check whether the corresponding PV positive and negative poles on the inverter are reversed, if yes, wait until the PV string current is reduced to below 0.5A, then disconnect the DC switch and adjust the corresponding PV polarity. 2. If you confirm that the fault is not caused by the above reasons and still exists, please contact LIVOLTEK's customer service centre.
DC contactor fault	1. Abnormal internal system modules 2. System related wiring or terminals are abnormal	1.Wait for the system to return to normal 2.Disconnect the AC side switch and DC switch, if there is a battery, you need to disconnect the battery side switch, wait for 15 minutes and then close the AC and DC switches in turn, restart the system, if the fault still exists, please contact LIVOLTEK customer service centre.
BUS average undervoltage	1. Abnormal internal system modules 2. System related wiring or terminals are abnormal	1.Wait for the system to return to normal 2.Disconnect the AC side switch and DC switch, if there is a battery, you need to disconnect the battery side switch, wait for 15 minutes and then close the AC and DC switches in turn, restart the system, if the fault still exists, please contact LIVOLTEK customer service centre.
DC overcurrent	1. Abnormal internal system modules 2. System related wiring or terminals are abnormal	1.Wait for the system to return to normal 2.Disconnect the AC side switch and DC switch, if there is a battery, you need to disconnect the battery side switch, wait for 15 minutes and then close the AC and DC switches in turn, restart the system, if the fault still exists, please contact LIVOLTEK customer service centre.
PV3 overcurrent	1. Abnormal internal system modules 2. System related wiring or terminals are abnormal	1.Wait for the system to return to normal 2.Disconnect the AC side switch and DC switch, if there is a battery, you need to disconnect the battery side switch, wait for 15 minutes and then close the AC and DC switches in turn, restart the system, if the fault still exists, please contact LIVOLTEK customer service centre.
	1. Abnormal internal system modules 2. System related wiring or terminals are abnormal	1.Wait for the system to return to normal 2.Disconnect the AC side switch and DC switch, if there is a battery, you need to disconnect the battery side switch, wait for 15 minutes and then close the AC and DC switches in turn, restart the system, if the fault still exists, please contact LIVOLTEK customer service centre.
Redundance fault	1. Abnormal internal system modules 2. System related wiring or terminals are abnormal	1.Wait for the system to return to normal 2.Disconnect the AC side switch and DC switch, if there is a battery, you need to disconnect the battery side switch, wait for 15 minutes and then close the AC and DC switches in turn, restart the system, if the fault still exists, please contact LIVOLTEK customer service centre.
T phase inversion voltage sample abnormal	1. Abnormal internal system modules 2. System related wiring or terminals are abnormal	1.Wait for the system to return to normal 2.Disconnect the AC side switch and DC switch, if there is a battery, you need to disconnect the battery side switch, wait for 15 minutes and then close the AC and DC switches in turn, restart the system, if the fault still exists, please contact LIVOLTEK customer service centre.
T phase DC component sample abnormal	1. Abnormal internal system modules 2. System related wiring or terminals are abnormal	1.Wait for the system to return to normal 2.Disconnect the AC side switch and DC switch, if there is a battery, you need to disconnect the battery side switch, wait for 15 minutes and then close the AC and DC switches in turn, restart the system, if the fault still exists, please contact LIVOLTEK customer service centre.

PV1 current sample abnormal	1. Abnormal internal system modules 2. System related wiring or terminals are abnormal	1.Wait for the system to return to normal 2.Disconnect the AC side switch and DC switch, if there is a battery, you need to disconnect the battery side switch, wait for 15 minutes and then close the AC and DC switches in turn, restart the system, if the fault still exists, please contact LIVOLTEK customer service centre.
SPI communicate fault	1. Abnormal internal system modules 2. System related wiring or terminals are abnormal	1.Wait for the system to return to normal 2.Disconnect the AC side switch and DC switch, if there is a battery, you need to disconnect the battery side switch, wait for 15 minutes and then close the AC and DC switches in turn, restart the system, if the fault still exists, please contact LIVOLTEK customer service centre.
Hardware verion get fault	1. Abnormal internal system modules 2. System related wiring or terminals are abnormal	1.Wait for the system to return to normal 2.Disconnect the AC side switch and DC switch, if there is a battery, you need to disconnect the battery side switch, wait for 15 minutes and then close the AC and DC switches in turn, restart the system, if the fault still exists, please contact LIVOLTEK customer service centre.
Mode high temperature	1. Abnormal internal system modules 2. System related wiring or terminals are abnormal	1.Wait for the system to return to normal 2.Disconnect the AC side switch and DC switch, if there is a battery, you need to disconnect the battery side switch, wait for 15 minutes and then close the AC and DC switches in turn, restart the system, if the fault still exists, please contact LIVOLTEK customer service centre.
Ambient temperature is too high	The temperature inside the chassis is too high; Excessive temperature of the operating environment.	Normally, the inverter will re-connect to the grid when the grid returns to normal. If the fault occurs repeatedly: 1. Check if the ambient temperature of the machine is too high 2. Check whether the machine is in an easily ventilated place 3. Check whether the machine is in direct light, if so, please appropriate shade 4. Check whether the fan is running normally, if not, please replace the fan 5. If you confirm that the fault is not caused by the above reasons
Relay Err	1. Abnormal internal system modules 2. System related wiring or terminals are abnormal	1.Wait for the system to return to normal 2.Disconnect the AC side switch and DC switch, if there is a battery, you need to disconnect the battery side switch, wait for 15 minutes and then close the AC and DC switches in turn, restart the system, if the fault still exists, please contact LIVOLTEK customer service centre.
Hardware protection	1. Abnormal internal system modules 2. System related wiring or terminals are abnormal	1.Wait for the system to return to normal 2.Disconnect the AC side switch and DC switch, if there is a battery, you need to disconnect the battery side switch, wait for 15 minutes and then close the AC and DC switches in turn, restart the system, if the fault still exists, please contact LIVOLTEK customer service centre.
Current unbalance fault	1. Abnormal internal system modules 2. System related wiring or terminals are abnormal	1.Wait for the system to return to normal 2.Disconnect the AC side switch and DC switch, if there is a battery, you need to disconnect the battery side switch, wait for 15 minutes and then close the AC and DC switches in turn, restart the system, if the fault still exists, please contact LIVOLTEK customer service centre.
Low envir temperature	Ambient temperature below the protection value is detected.	Shut down and disconnect the inverter and wait for the ambient temperature to rise to within the inverter operating temperature range before restarting the inverter.
Input config abnarmal	1. Abnormal internal system modules 2. System related wiring or terminals are abnormal	1.Wait for the system to return to normal 2.Disconnect the AC side switch and DC switch, if there is a battery, you need to disconnect the battery side switch, wait for 15 minutes and then close the AC and DC switches in turn, restart the system, if the fault still exists, please contact LIVOLTEK customer service centre.

Grid voltage redundancy detection fault	1. Abnormal internal system modules 2. System related wiring or terminals are abnormal	1.Wait for the system to return to normal 2.Disconnect the AC side switch and DC switch, if there is a battery, you need to disconnect the battery side switch, wait for 15 minutes and then close the AC and DC switches in turn, restart the system, if the fault still exists, please contact LIVOLTEK customer service centre.
Grid frequency redundancy detection fault	1. Abnormal internal system modules 2. System related wiring or terminals are abnormal	1.Wait for the system to return to normal 2.Disconnect the AC side switch and DC switch, if there is a battery, you need to disconnect the battery side switch, wait for 15 minutes and then close the AC and DC switches in turn, restart the system, if the fault still exists, please contact LIVOLTEK customer service centre.
Inverter insulation impedance redundancy detection fault	1. Abnormal internal system modules 2. System related wiring or terminals are abnormal	1.Wait for the system to return to normal 2.Disconnect the AC side switch and DC switch, if there is a battery, you need to disconnect the battery side switch, wait for 15 minutes and then close the AC and DC switches in turn, restart the system, if the fault still exists, please contact LIVOLTEK customer service centre.
Inverter leakage current redundancy detection fault	1. Abnormal internal system modules 2. System related wiring or terminals are abnormal	1.Wait for the system to return to normal 2.Disconnect the AC side switch and DC switch, if there is a battery, you need to disconnect the battery side switch, wait for 15 minutes and then close the AC and DC switches in turn, restart the system, if the fault still exists, please contact LIVOLTEK customer service centre.
Fan alarm	1. Abnormal internal system modules 2. System related wiring or terminals are abnormal	1. The inverter can continue to running; 2. Check whether cables and terminals related to the alarm are abnormal, and rectify the anomalies such as foreign bodies in the environment. 3. If the alarm persists, contact the Livoltek customer service center.
DC lightning protect alarm	1. Abnormal internal system modules 2. System related wiring or terminals are abnormal	1. The inverter can continue to running; 2. Check whether cables and terminals related to the alarm are abnormal, and rectify the anomalies such as foreign bodies in the environment. 3. If the alarm persists, contact the Livoltek customer service center.
Envir temperature sensor open circuit alarm	1. Abnormal internal system modules 2. System related wiring or terminals are abnormal	1. The inverter can continue to running; 2. Check whether cables and terminals related to the alarm are abnormal, and rectify the anomalies such as foreign bodies in the environment. 3. If the alarm persists, contact the Livoltek customer service center.
Envir temperature sensor short circuit alarm	1. Abnormal internal system modules 2. System related wiring or terminals are abnormal	1. The inverter can continue to running; 2. Check whether cables and terminals related to the alarm are abnormal, and rectify the anomalies such as foreign bodies in the environment. 3. If the alarm persists, contact the Livoltek customer service center.
inversion temperature sensor open circuit alarm	1. Abnormal internal system modules 2. System related wiring or terminals are abnormal	1. The inverter can continue to running; 2. Check whether cables and terminals related to the alarm are abnormal, and rectify the anomalies such as foreign bodies in the environment. 3. If the alarm persists, contact the Livoltek customer service center.
inversion temperature sensor short circuit alarm	1. Abnormal internal system modules 2. System related wiring or terminals are abnormal	1. The inverter can continue to running; 2. Check whether cables and terminals related to the alarm are abnormal, and rectify the anomalies such as foreign bodies in the environment. 3. If the alarm persists, contact the Livoltek customer service center.

PV4 Reversely Connected Fault	PV positive and negative terminals reversed	1.Please check whether the corresponding PV positive and negative poles on the inverter are reversed, if yes, wait until the PV string current is reduced to below 0.5A, then disconnect the DC switch and adjust the corresponding PV polarity. 2. If you confirm that the fault is not caused by the above reasons and still exists, please contact LIVOLTEK's customer service centre.
PV5 Reversely Connected Fault	PV positive and negative terminals reversed	1.Please check whether the corresponding PV positive and negative poles on the inverter are reversed, if yes, wait until the PV string current is reduced to below 0.5A, then disconnect the DC switch and adjust the corresponding PV polarity. 2. If you confirm that the fault is not caused by the above reasons and still exists, please contact LIVOLTEK's customer service centre.
PV6 Reversely Connected Fault	PV positive and negative terminals reversed	1.Please check whether the corresponding PV positive and negative poles on the inverter are reversed, if yes, wait until the PV string current is reduced to below 0.5A, then disconnect the DC switch and adjust the corresponding PV polarity. 2. If you confirm that the fault is not caused by the above reasons and still exists, please contact LIVOLTEK's customer service centre.
AFCI Fault	AFCI fault on DC side of inverter	1.Disconnect the DC power, check whether there are broken cables, loose connection terminals or fuses and poor contact on the DC side, or burn marks on the parts; if there are, replace the broken cables, tighten the loose connection terminals or fuses, and replace the parts with burn marks; 2.After completing step 1 DC side inspection and rectification and repair, reconnect the DC power and clear the AFCI fault through APP or WEB, the inverter will operate normally again; 3. If you confirm that the fault is not caused by the above reasons and still exists, please contact LIVOLTEK's customer service centre.
Meter communication fault	1.Communication wire disconnected between meter and inverter; 2.poor contact at meter or inverter communication terminals. 3.Grid cut.	1. Check whether the power grid is normal; 2.Check whether there is any abnormality in the communication line and its terminals, if so, ensure its reliable connection; 3. Reinstall the meter communication line; 4. If you confirm that the fault is not caused by the above reasons and still exists, please contact; LIVOLTEK's customer service centre.

10 Technical Data

Technical Data	GT1-2K5D2	GT1-3KD2	GT1-3K3D2	GT1-3K6D2
PV Input Data				
Max. DC Input Power [Wp]	3750	4500	4950	5400
Max. DC Input Voltage[V]	600			
Min PV input voltage[V]	70			
Start-up DC Input Voltage[V]	90			
Nominal DC Input Voltage[V]	360			
MPPT Operating Range[V]	70-550	70-550	70-550	70-550
MPPT Operating Range(Full-Load)[V]	120-480	140-480	140-480	170-480
Max. DC Input Current[A]	16/16			
Max.Short Circuit current[A]	20/20			
No. of MPPTs	2			
No. of Strings per MPP Tackers	1/1			
AC Output Data				
Nominal Output Power [W]	2500	3000	3300	3600
Max. Apparent Power [VA]	2750	3300	3630	3960 (3680@G98)
Rated AC Grid Output Current[A]	11.4	13.6	15.0	16.3
Max. AC Output Current[A]	12.5	15.0	16.5	18 (16.7@G98)
Rated AC Grid Voltage[V]	220/230/240, L/N/PE			
AC Grid Voltage Range []V	154-290			
Rated Grid Frequency [Hz]	50/60			
Grid Frequency Range [H]z	45-55/55-65			
Power Factor	0.8 leading to 0.8 lagging			
Output THDi (@Nominal Output)	< 3			
Efficiency				
Max. Efficiency[%]	97.70%	97.70%	97.70%	97.70%
Euro Efficiency[%]	96.50%	96.50%	96.50%	96.50%
MPPT Efficiency[%]	99.99%	99.99%	99.99%	99.99%
Protection				
Integrated DC Switch	Support			
DC Reverse Polarity Protection	Support			
DC SPD Protection	Type II			
PV Current Detection	Support			
Insulation Resistor Detection	Support			
Output Over Current Protection	Support			
AC Short Circuit Protection	Support			
Output Over Voltage Protection	Support			
AC SPD Protection	Type II			
Anti-islanding Protection	Support			

Temperature Protection	Support
Ground Fault Monitoring	Support
Internal Over Voltage Protection	Support
Input Over Current Protection	Support
Grid Monitoring	Support
Residual Current Monitoring Unit	Support
Arc-fault circuit interrupter (AFCI)	Optional
AC auxiliary power supply (APS)	Optional
General Data	
Dimensions[W*H*D] [mm]	368*325*150
Weight [kg]	12
Mounting Information	Wall Mounting
Protection Degree	Class I
Cooling	Natural cooling
Operating Temperature Range [℃]	-30°C ... +60 °C (derating at 45°C)
Over Voltage Degree	
Relative Humidity	0-100%
Max. Operating Altitude(m）	4000(≥2000)
Typical Noise Emission(dB)	≤30
Night Self Consumption [W]	< 1
Display	LED
Communication	RS485(Meter),USB (Wi-Fi)
Topology	Transformerless
Certifications and Standards	
Grid Regulation	IEC61727, IEC62116, ABNT NBR 16149, ABNT NBR 16150,EN50549
Safety	EC62109-1/-2
EMC	IEC61000-6-1/2/3/4
Standard Warranty[years]	10

Technical Data	GT1-4KD2	GT1-5KD2	GT1-5KD2C	GT1-6KD2
PV Input Data				
Max. DC Input Power [Wp]	6000	7500	7500	9000
Max. DC Input Voltage[V]	600			
Min PV input voltage[V]	70			
Start-up DC Input Voltage[V]	90			
Nominal DC Input Voltage[V]	360			
MPPT Operating Range[V]	70-550	70-550	70-550	70-550
MPPT Operating Range(Full-Load)[V]	190-480	235-480	235-480	285-480
Max. DC Input Current[A]	16/16			
Max.Short Circuit current[A]	20/20			
No. of MPPTs	2			
No. of Strings per MPP Tackers	1/1			
AC Output Data				
Nominal Output Power [W]	4000	5000	5000	6000
Max. Apparent Power [VA]	4400	5500 (4999@AS4777)	5000	6600
Rated AC Grid Output Current[A]	18.2	22.7	22.7	27.3
Max. AC Output Current[A]	20.0	25 (22.7@AS4777)	22.7	30.0
Rated AC Grid Voltage[V]	220/230/240, L/N/PE			
AC Grid Voltage Range []V	154-290			
Rated Grid Frequency [Hz]	50/60			
Grid Frequency Range [H]z	45-55/55-65			
Power Factor	0.8 leading to 0.8 lagging			
Output THDi (@Nominal Output)	< 3			
Efficiency				
Max. Efficiency[%]	97.70%	70% 97	97.70%	97.70%
Euro Efficiency[%]	97.00%	00% 97	97.00%	97.00%
MPPT Efficiency[%]	99.99%	99% 99	99.99%	99.99%
Protection				
Integrated DC Switch	Support			
DC Reverse Polarity Protection	Support			
DC SPD Protection	Type II			
PV Current Detection	Support			
Insulation Resistor Detection	Support			
Output Over Current Protection	Support			
AC Short Circuit Protection	Support			
Output Over Voltage Protection	Support			
AC SPD Protection	Type II			
Anti-islanding Protection	Support			

Temperature Protection	Support
Ground Fault Monitoring	Support
Internal Over Voltage Protection	Support
Input Over Current Protection	Support
Grid Monitoring	Support
Residual Current Monitoring Unit	Support
Arc-fault circuit interrupter (AFCI)	Optional
AC auxiliary power supply (APS)	Optional
General Data	
Dimensions[W*H*D] [mm]	368*325*150
Weight [kg]	12
Mounting Information	Wall Mounting
Protection Degree	Class I
Cooling	Natural cooling
Operating Temperature Range [℃]	-30°C ... +60 °C (derating at 45°C)
Relative Humidity	0-100%
Max. Operating Altitude(m）	4000(≥2000)
Typical Noise Emission(dB)	≤30
Night Self Consumption [W]	< 1
Display	LED
Communication	RS485(Meter), USB (Wi-Fi)
Topology	Transformerless
Certifications and Standards	
Grid Regulation	IEC61727, IEC62116, ABNT NBR 16149, ABNT NBR 16150,EN50549
Safety	EC62109-1/-2
EMC	IEC61000-6-1/2/3/4
Standard Warranty[years]	10

Technical Data	GT1-7KT2	GT1-8KT2	GT1-9KT2	GT1-10KT2
PV Input Data				
Max. DC Input Power [Wp]	10500	12000	13500	15000
Max. DC Input Voltage[V]	600			
Min PV input voltage[V]	70			
Start-up DC Input Voltage[V]	90			
Nominal DC Input Voltage[V]	360			
MPPT Operating Range[V]	70-550			
Max. DC Input Current[A]	16/16/16			
Max.Short Circuit current[A]	20/20/20			
No. of MPPTs	3			
No. of Strings per MPP Tackers	1/1/1			
AC Output Data				
Nominal Output Power [W]	7000	8000	9000	10000
Max. Apparent Power [VA]	7700	8800	9900	11000
Rated AC Grid Output Current[A]	31.8	36.4	40.9	45.5
Max. AC Output Current[A]	35	40	45	50
Rated AC Grid Voltage[V]	220/230/240,L+N+PE			
AC Grid Voltage Range①[V]	154-290(Adjustable)			
Rated Grid Frequency [Hz]	50/60			
Grid Frequency Range②[Hz]	45-55/55-65			
Power Factor	0.8 leading to 0.8 lagging			
Output THDi (@Nominal Output)	< 3%			
Efficiency				
Max. Efficiency[%]	98.00%	98.00%	98.00%	98.00%
Euro Efficiency[%]	97.50%	97.50%	97.50%	97.50%
MPPT Efficiency[%]	99.99%	99.99%	99.99%	99.99%
Protection				
Integrated DC Switch	Support			
DC Reverse Polarity Protection	Support			
DC SPD Protection	Type II			
PV Current Detection	Support			
Insulation Resistor Detection	Support			
Output Over Current Protection	Support			
AC Short Circuit Protection	Support			
Output Over Voltage Protection	Support			
AC SPD Protection	Type II			
Anti-islanding Protection	Support			
Temperature Protection	Support			
Ground Fault Monitoring	Support			
Internal Over Voltage Protection	Support			
Input Over Current Protection	Support			
Grid Monitoring	Support			
Residual Current Monitoring Unit	Support			
AFCI Protection	Optional			
General Data				
Dimensions[W*H*D] [mm]	465*425*180			

Weight [kg]	19.4
Mounting Information	Wall Mounting
Protection Degree	IP65
Cooling	Natural cooling
Operating Temperature Range [℃]	–30 °C ... +60 °C (derating at 45°C)
Relative Humidity	0-100%
Max. Operating Altitude(m)	4000
Typical Noise Emission(dB)	< 35
Night Self Consumption [W]	< 1
Display	APP+LED
Communication	RS485(Meter),USB for WiFi
Topology	Transformerless
Certifications and Standards	
Grid Regulation	ORDINANCE No. 140, OF MARCH 21, 2022,IEEE1547
Safety	IEC62109-1/-2, UL1741
EMC	IEC61000-6-1/2/3/4
Standard Warranty[years]	10 years

11 Decommissioning

11.1 Disassemble the Inverter

- Remove DC input line and AC output line of inverter.
- Wait for at least 5 minutes to power off.
- Remove all cable connections from the inverter.
- Remove inverter from finger support the bracket.
- Remove the bracket if necessary.
- Load the inverter into the original package if possible.

11.2 Packing

- Load the inverter into the original package if possible.
- If the original package can not be found, you can also use the
- following requirements of the carton packaging:
- Bearing capacity of more than 30 kg.
- Easy to carry.
- Can completely seal the cover.

11.3 Storage and Transportation

- Store the inverter in a dry, temperature -40°C～70°C
- environment.
- Pay attention to less than four machines on each stack board
- during storage and transportation.

11.4 Waste Disposal

- If it is necessary to scrap the inverter or other related parts, be
- sure to send the waste inverter and packaging materials to the
- designated location for recycling by the relevant department.

12 Disclaimer

The GT1 2.5~10kW series grid-tied inverters are transported, used and operated under limited condition, such as environmental, electrical etc. Livoltek shall not be liable to provide the service, technical support or compensation under conditions listed below, including but not limited to:

. Inverter is damaged or broken by force majeure (such as earthquake, flooding, thunderstorm, lighting, fire hazard, volcanic eruption etc.).

. Inverter's warranty is expired and doesn't buy extended warranty.

. Can't provide the inverter's SN, warranty card or invoice.

. Inverter is damaged by man-made cause.

. Inverter is used or operated against any items in local policy.

. Inverter's installation, configuration, commissioning doesn't follow the requirements mentioned in this manual.

. Inverter is installed, refitted or operated in improper ways mentioned in this manual without authority from Livoltek.

. Inverter is installed, operated under improper environment or electrical condition mentioned in this manual without authority from Livoltek.

. Inverter is changed, updated or disassembled on hardware or software without authority from Livoltek.

. Obtain the communication protocol from other illegal channels.

. Build monitoring, control system without authority from Livoltek.

. Livoltek will keep right to explain all the contents in this user manual.

LIVOLTEK®

1418-35 Moganshan Road, Hangzhou, 310011, China

info@livoltek.com

www.livoltek.com